Step Motor Controller (Servo/24 VDC)

Series ***LECP6***

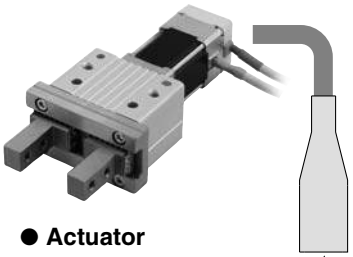

● Actuator

● I/O cable

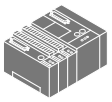

PLC

Power supply for I/O signal 24 VDC

Please prepare PLC and 24 VDC power supply for I/O signal.

● Controller

To CN5

To CN4

To CN3

To CN2

To CN1

Actuator cable ●

Controller power supply 24 VDC

(Please prepare power cables and 24 VDC input power supplies [power supplies other than the inrush current prevention type] for the cotroller.)

● Power supply plug
(accessory)

Options

● **Controller setting software**
(Communication cable, USB cable and conversion unit are included.)

● Conversion unit

● Communication cable

USB cable ●
(A-miniB type)

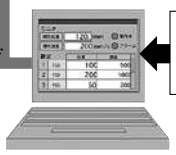

Software for input setting data of controller

PC

or

● Teaching box
(with 3 m cable)

Equipment for input setting data of controller

Step Motor Controller (Servo/24 VDC)

Series LECP6

How to Order

LE C P 6 N □ □ – □

- **Actuator**
- **Controller**
- **Compatible motor**

P	Step motor (Servo/24 VDC)

- **Number of step data**

6	64 points

- **Parallel I/O type**

N	NPN
P	PNP

- **I/O cable length**

Nil	Without cable
1	1.5 m
3	3 m
5	5 m

- **Option**

Nil	Screw mounting
D Note)	DIN rail mounting

Note) DIN rail is not included. Order it separately.

- **Actuator part number**

(Except cable specifications and actuator options)
Example: Enter [LEHZ10LK2-4] for LEHZ10LK2-4AF-R16N1

∗ When controller equipped type (-P6□□) is selected when ordering the LE series, you do not need to order this controller.

The controller is sold as single unit after the compatible actuator is set.

Confirm that the combination of the controller and the actuator is compatible.

<Be sure to check the following before use.>

① Check that actuator label for model number. This matches the controller.

② Check Parallel I/O configuration matches (NPN or PNP).

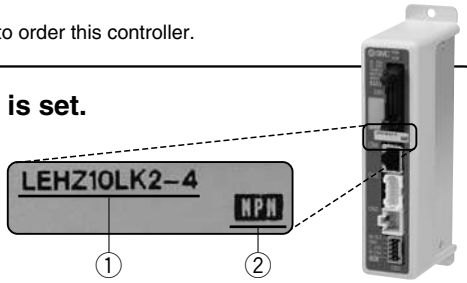

Specifications

Basic Specifications

Item	Specifications
Compatible motor	Unipolar connection type 2-phase HB step motor
Power supply Note 1)	Power voltage: 24 VDC ±10% Current consumption: 3 A (Peak 5 A) Note 2) [Including motor drive power, control power, stop, lock release]
Parallel input	11 inputs (Photo-coupler isolation)
Parallel output	13 outputs (Photo-coupler isolation)
Compatible encoder	A/B phase, Line receiver input Resolution 800 p/r
Serial communication	RS485 (Modbus protocol compliant)
Memory	EEPROM
LED indicator	LED (Green/Red) one of each
Lock control	Forced-lock release terminal Note 3)
Cable length (m)	I/O cable: 5 or less Actuator cable: 20 or less
Cooling system	Natural air cooling
Operating temperature range (°C)	0 to 40 (No condensation and freezing)
Operating humidity range (%)	35 to 85 (No condensation and freezing)
Storage temperature range (°C)	–10 to 60 (No condensation and freezing)
Storage humidity range (%)	35 to 85 (No condensation and freezing)
Insulation resistance (MΩ)	Between the housing (radiation fin) and SG terminal 50 (500 VDC)
Weight (g)	150 (Screw mounting) 170 (DIN rail mounting)

Note 1) Do not use the power supply of "inrush current prevention type" for the controller power supply.
Note 2) The power consumption changes depending on the actuator model. Refer to the specifications of actuator for more details.
Note 3) Applicable to non-energized lock control type.

How to Mount

a) Screw mounting (LECP6□□-□)
(Installation with two M4 screws)

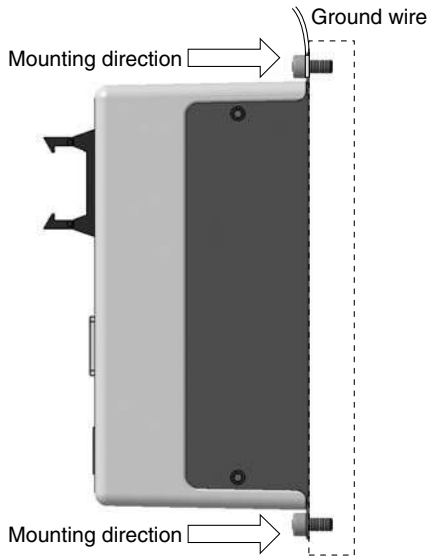

b) DIN rail mounting (LECP6□□D-□)
(Installation with the DIN rail)

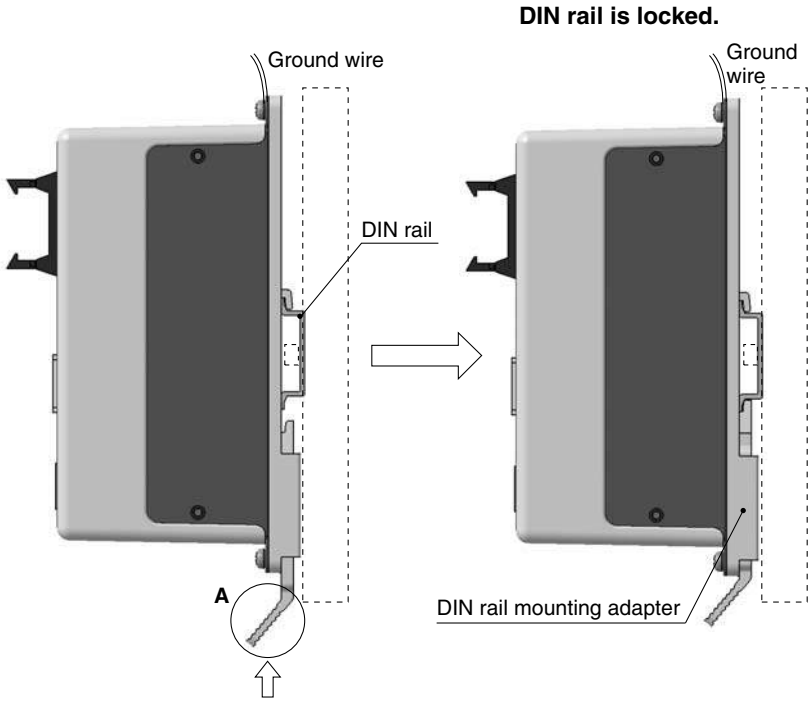

Hook the controller on the DIN rail and press the lever of section **A** in the arrow direction to lock it.

DIN rail
AXT100-DR-□

∗ For □, enter a number from the "No." line in the below table.
Refer to the dimensions on page 52 for the mounting dimensions.

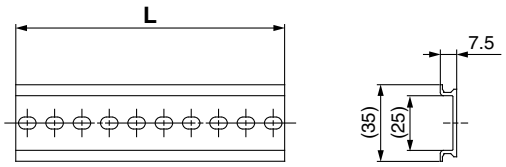

L Dimensions

No.	1	2	3	4	5	6	7	8	9	10	11	12	13	14	15	16	17	18	19	20
L dimension	23	35.5	48	60.5	73	85.5	98	110.5	123	135.5	148	160.5	173	185.5	198	210.5	223	235.5	248	260.5
No.	21	22	23	24	25	26	27	28	29	30	31	32	33	34	35	36	37	38	39	40
L dimension	273	285.5	298	310.5	323	335.5	348	360.5	373	385.5	398	410.5	423	435.5	448	460.5	473	485.5	498	510.5

DIN rail mounting adapter
LEC-D0 (with 2 mounting screws)

This should be used when the DIN rail mounting adapter is mounted onto the screw mounting type controller afterwards.

Dimensions

a) Screw mounting (LECP6□□-□)

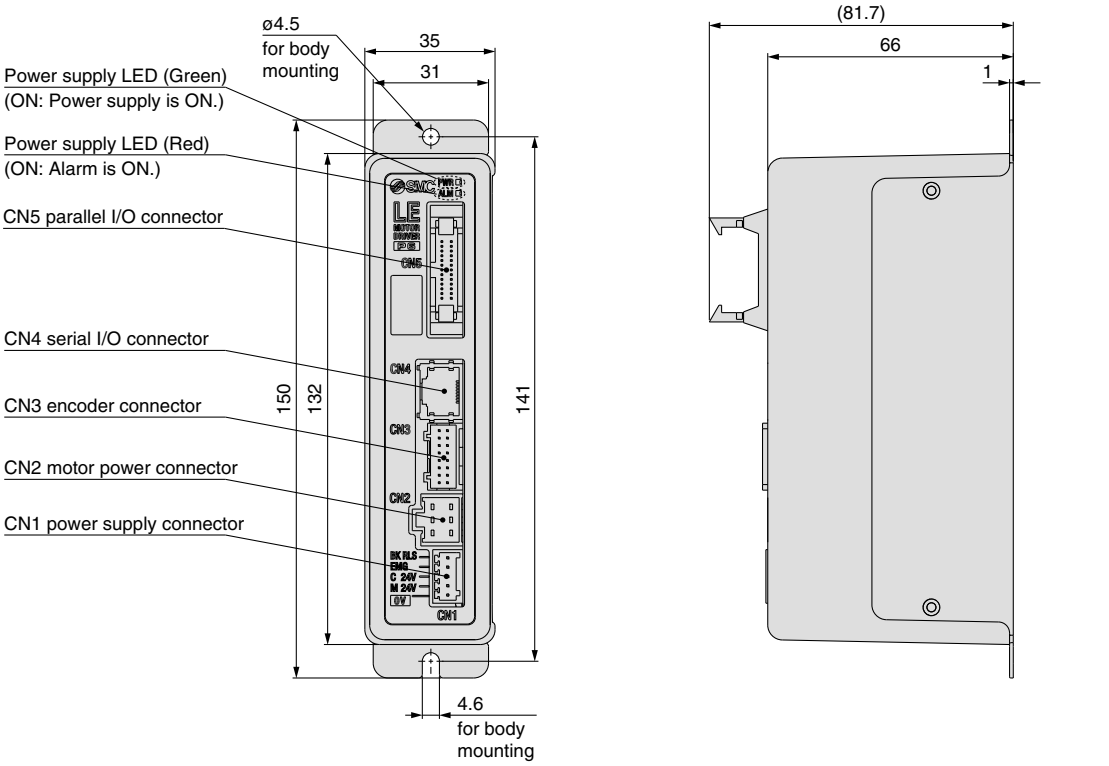

b) DIN rail mounting (LECP6□□D-□)

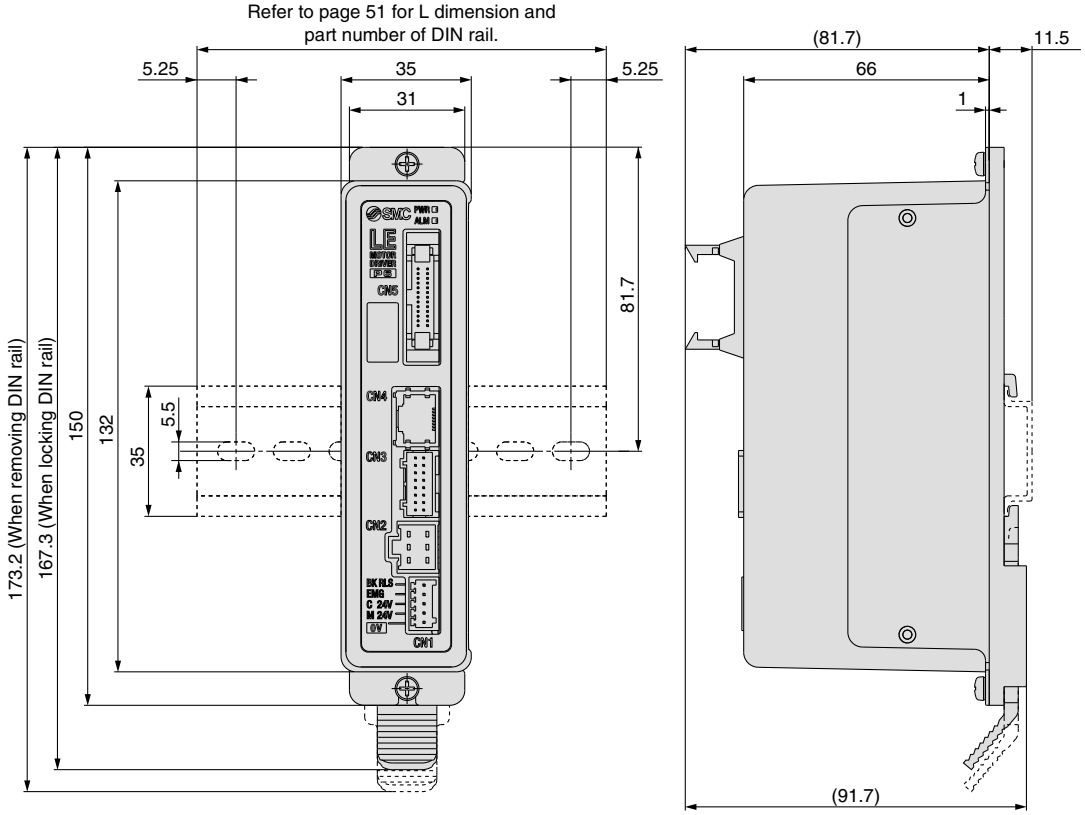

Wiring Example 1

Power Supply Connector: CN1

∗ Power supply plug (Phoenix Contact FK-MC0.5/5-ST-2.5) is an accessory.

Power supply plug

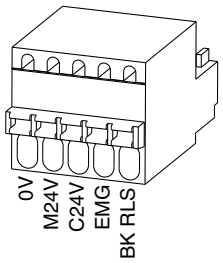

CN1 Power Supply Connector Terminal

Terminal name	Function	Function details
0V	Common supply (–)	M24V terminal/C24V terminal/EMG terminal/BK RLS terminal are common (–).
M24V	Motor power supply (+)	This is the motor power supply (+) that is supplied to the controller.
C24V	Control power supply (+)	This is the control power supply (+) that is supplied to the controller.
EMG	Stop (+)	This is the input (+) that releases the stop.
BK RLS	Lock release (+)	This is the input (+) that releases the lock.

Wiring Example 2

Parallel I/O Connector: CN5

∗ When you connect a PLC, etc., to the CN5 parallel I/O connector, please use the I/O cable (LEC-CN5-□).
∗ The wiring should be changed depending on the type of the parallel I/O (NPN or PNP). Please wire referring to the following diagram.

Wiring diagram

LECP6N□□-□ (NPN)

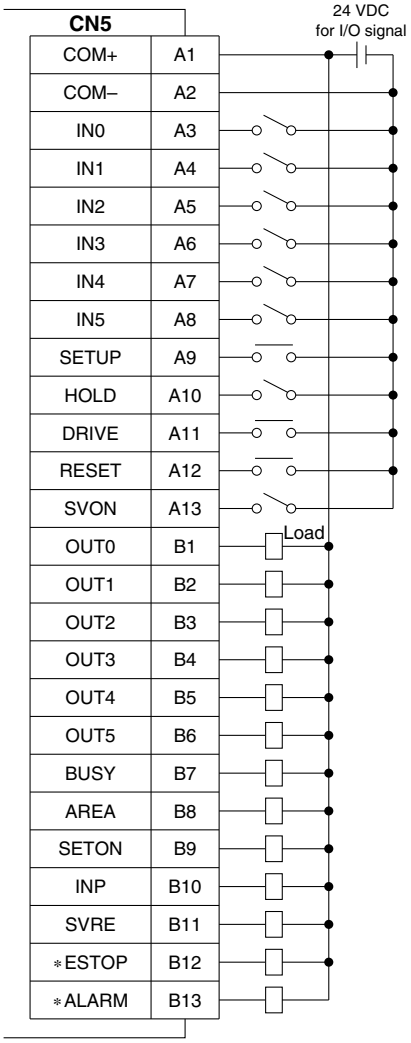

LECP6P□□-□ (PNP)

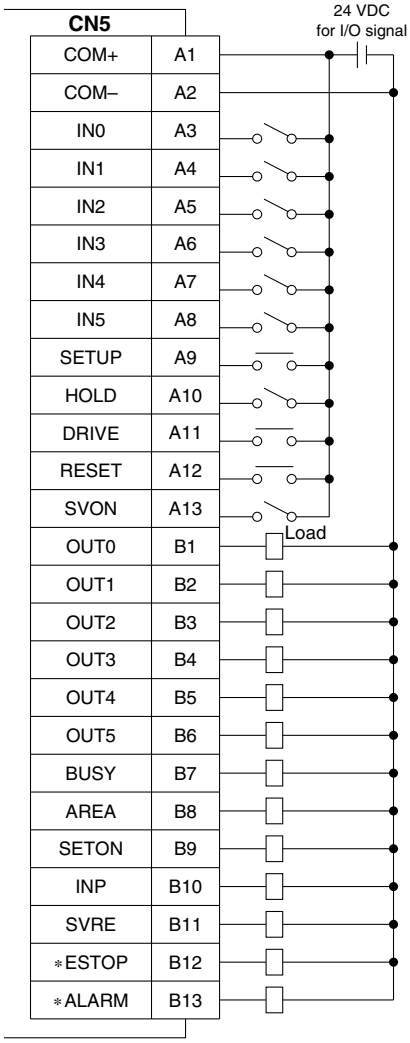

Input Signal

Name	Contents
COM+	Connects the power supply 24 V for input/output signal
COM–	Connects the power supply 0 V for input/output signal
IN0 to IN5	Step data specified Bit No. (Input is instructed in the combination of IN0 to 5.)
SETUP	Instruction to return to the original position
HOLD	Operation is temporarily stopped.
DRIVE	Instruction to drive
RESET	Alarm reset and operation interruption
SVON	Servo ON instruction

Output Signal

Name	Contents
OUT0 to OUT5	Outputs the step data No. during operation
BUSY	Outputs when the actuator is moving
AREA	Outputs within the step data area output setting range
SETON	Outputs when returning to the original position
INP	Outputs when target position or target force is reached (Turns on when the positioning or pushing is completed.)
SVRE	Outputs when servo is on
∗ESTOP Note)	Not output when EMG stop is instructed
∗ALARM Note)	Not output when alarm is generated

Note) These signals are output when the power supply of the controller is ON. (N.C.)

Step Data Setting

1. Step data setting for positioning

In this setting, the actuator moves toward and stops at the target position. The following diagram shows the setting items and operation. The setting items and set values for this operation are stated below.

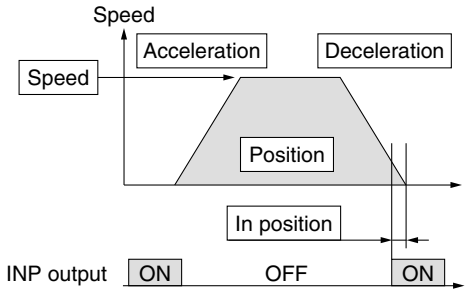

◎: Need to be set.
○: Need to be adjusted as required.
—: Setting is not required.

Step Data (Positioning)

Necessity	Item	Description
◎	Movement MOD	When the absolute position is required, set Absolute. When the relative position is required, set Relative.
◎	Speed	Transfer speed to the target position
◎	Position	Target position
○	Acceleration	Parameter which defines how rapidly the actuator reaches the speed set. The higher the set value, the faster it reaches the speed set.
○	Deceleration	Parameter which defines how rapidly the actuator comes to stop. The higher the set value, the quicker it stops.
◎	Pushing force	Set 0. (If values 1 to 100 are set, the operation will be changed to the pushing operation.)
—	Trigger LV	Setting is not required.
—	Pushing speed	Setting is not required.
○	Positioning force	Max. torque during the positioning operation (No specific change is required.)
○	Area 1, Area 2	Condition that turns on the AREA output signal.
○	In position	Condition that turns on the INP output signal. When the actuator enters the range of [in position], the INP output signal turns on. (It is unnecessary to change this from the initial value.) When it is necessary to output the arrival signal before the operation is completed, make the value larger.

2. Step data setting for pushing

The actuator moves toward the pushing start position, and when it reaches that position, it starts pushing with less than the set force. The following diagram shows the setting items and operation. The setting items and set values for this operation are stated below.

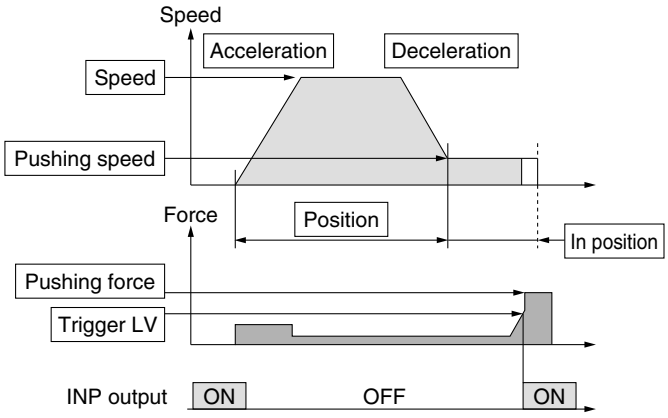

◎: Need to be set.
○: Need to be adjusted as required.

Step Data (Pushing)

Necessity	Item	Description
◎	Movement MOD	When the absolute position is required, set Absolute. When the relative position is required, set Relative.
◎	Speed	Transfer speed to the pushing start position
◎	Position	Pushing start position
○	Acceleration	Parameter which defines how rapidly the actuator reaches the speed set. The higher the set value, the faster it reaches the speed set.
○	Deceleration	Parameter which defines how rapidly the actuator comes to stop. The higher the set value, the quicker it stops.
◎	Pushing force	Pushing force ratio is defined. The setting range differs depending on the electric actuator type. Refer to the operation manual for the electric actuator.
◎	Trigger LV	Condition that turns on the INP output signal. The INP output signal is turned on when the generated force exceeds the value. Threshold level should be less than the pushing force.
○	Pushing speed	Pushing speed When the speed is set fast, the electric actuator and work pieces might be damaged due to the impact when they hit the end, so this set value should be smaller. Refer to the operation manual of the electric actuator.
○	Positioning force	Max. torque during the positioning operation (No specific change is required.)
○	Area 1, Area 2	Condition that turns on the AREA output signal.
◎	In position	Transfer distance during pushing. If the transferred distance exceeds the setting, it stops even if it is not pushing. If the transfer distance is exceeded, the INP output signal will not be turned on.

Signal Timing

Return to Origin

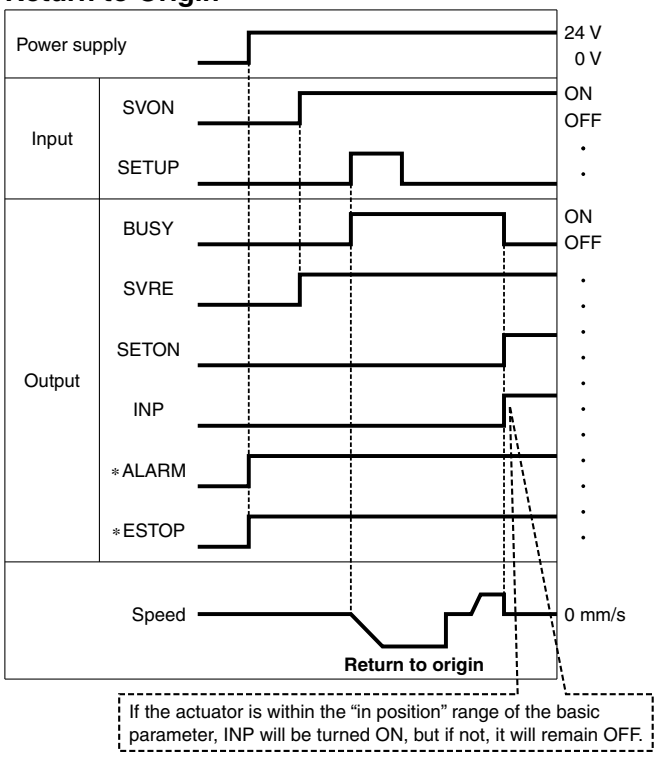

∗ "∗ALARM" and "∗ESTOP" are expressed as negative-logic circuit.
∗ When "Power supply is ON" is shown on the timing chart, the power supply is ON.
∗ When "Stop is OFF" is shown on the timing chart, the stop button is pressed (operation is stopped).

Positioning Operation

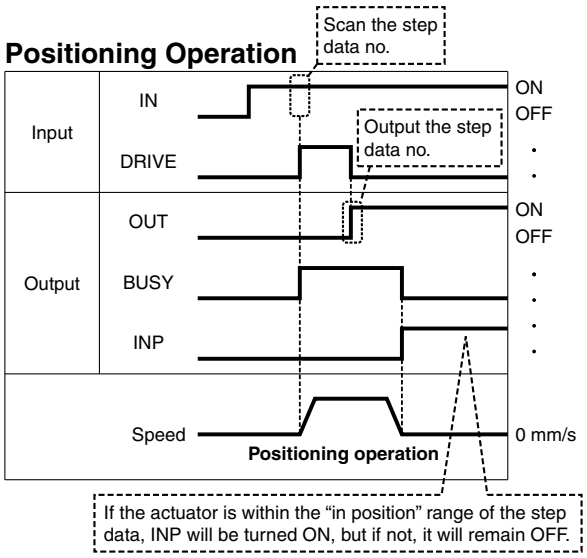

Pushing Operation

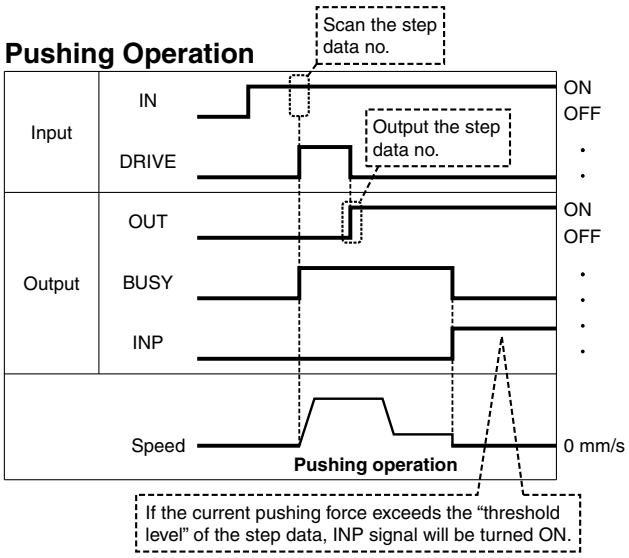

∗ "OUT" is output when "DRIVE" is changed from ON to OFF.
(When power supply is applied, "DRIVE" or "RESET" is turned ON or "∗ESTOP" is turned OFF, all of the "OUT" outputs are turned OFF.)

HOLD

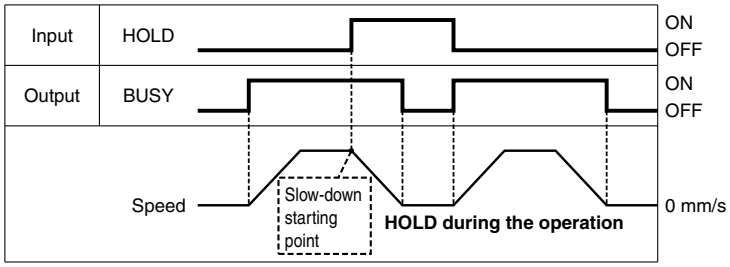

∗ When the actuator is in the positioning range in the pushing operation, it does not stop even if HOLD signal is input.

Reset

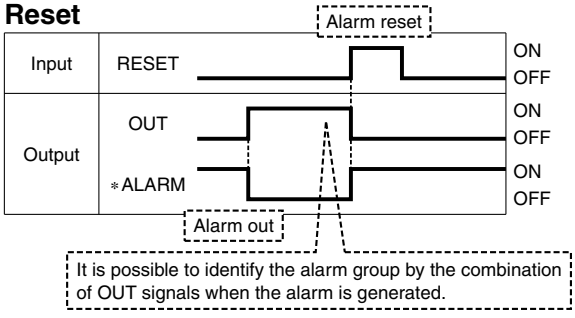

∗ "∗ALARM" and "∗ESTOP" are expressed as negative-logic circuit.

Options

[Actuator cable]

LE − CP − 1

Cable length (L)

1	1.5 m
3	3 m
5	5 m
8	8 m*
A	10 m*
B	15 m*
C	20 m*

* Produced upon receipt of order

LE-CP-$^{1}_{3}_{5}$/Cable length: 1.5 m, 3 m, 5 m

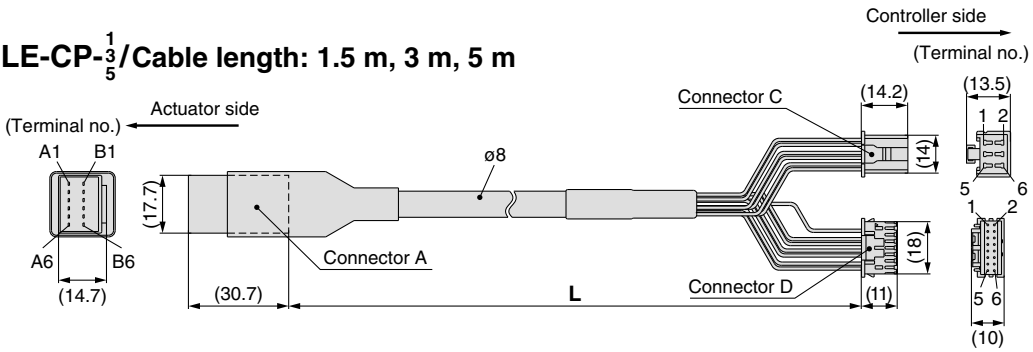

LE-CP-$^{8}_{10}_{20}^{15}$/Cable length: 8 m, 10 m, 15 m, 20 m
(* Produced upon receipt of order)

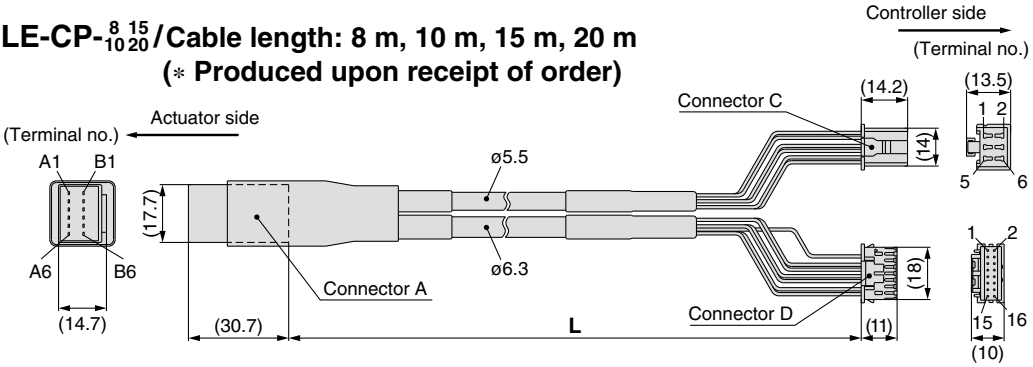

Circuit	Connector A terminal no.
A	B-1
$\overline{A}$	A-1
B	B-2
$\overline{B}$	A-2
COM-A/COM	B-3
COM-B/–	A-3
Vcc	B-4
GND	A-4
$\overline{A}$	B-5
A	A-5
$\overline{B}$	B-6
B	A-6

Shield

Cable color	Connector C terminal no.
Brown	2
Red	1
Orange	6
Yellow	5
Green	3
Blue	4

Cable color	Connector D terminal no.
Brown	12
Black	13
Red	7
Black	6
Orange	9
Black	8
—	3

[I/O cable]

LEC − CN5 − 1

Cable length (L)

1	1.5 m
3	3 m
5	5 m

* Conductor size: AWG28

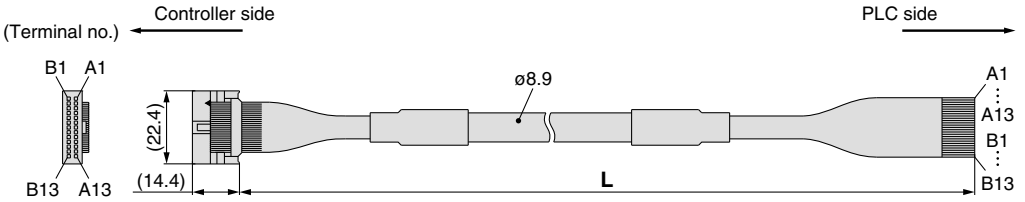

Connector pin No.	Cable color	Dot mark	Dot color
A1	Light brown	■	Black
A2	Light brown	■	Red
A3	Yellow	■	Black
A4	Yellow	■	Red
A5	Light green	■	Black
A6	Light green	■	Red
A7	Gray	■	Black
A8	Gray	■	Red
A9	White	■	Black
A10	White	■	Red
A11	Light brown	■ ■	Black
A12	Light brown	■ ■	Red
A13	Yellow	■ ■	Black

Connector pin No.	Cable color	Dot mark	Dot color
B1	Yellow	■ ■	Red
B2	Light green	■ ■	Black
B3	Light green	■ ■	Red
B4	Gray	■ ■	Black
B5	Gray	■ ■	Red
B6	White	■ ■	Black
B7	White	■ ■	Red
B8	Light brown	■ ■ ■	Black
B9	Light brown	■ ■ ■	Red
B10	Yellow	■ ■ ■	Black
B11	Yellow	■ ■ ■	Red
B12	Light green	■ ■ ■	Black
B13	Light green	■ ■ ■	Red
—	Shield		

Controller Setting Software/LEC-W1

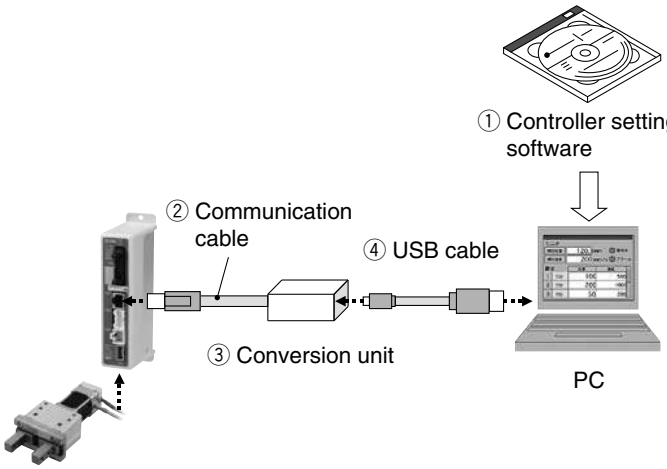

How to Order

LEC – W1

Controller setting software
(Japanese and English are available.)

Contents

① **Controller setting software (CD-ROM)**
② **Communication cable**
(Cable between the controller and the conversion unit)
③ **Conversion unit**
④ **USB cable**
(Cable between the PC and the conversion unit)

Hardware Requirements

PC/AT compatible machine installed with Windows XP and equipped with USB1.1 or USB2.0 ports.

∗ Windows® and Windows XP® are registered trademarks of Microsoft Corporation.

Screen Example

Easy mode screen example

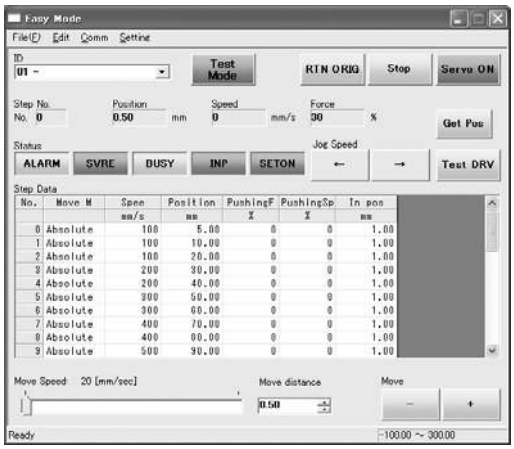

Easy operation and simple setting

- Allowing to set and display actuator step data such as position, speed, force, etc.
- Setting of step data and testing of the drive can be performed on the same page.
- Can be used to jog and move at a constant rate.

Normal mode screen example

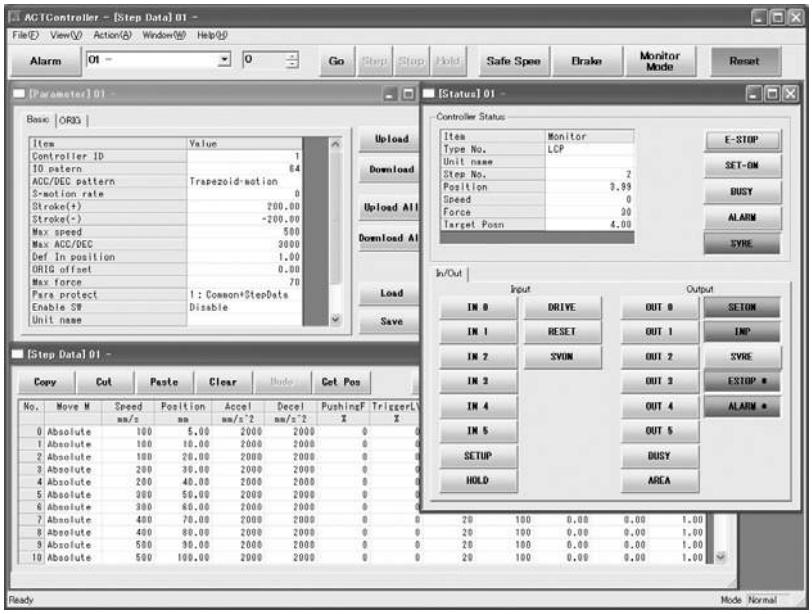

Detail setting

- Step data can be set in detail.
- Signals and terminal status can be monitored.
- Parameters can be set.
- JOG and constant rate movement, return to origin, test operation and testing of compulsory output can be performed.

Series LEC
Teaching Box/LEC-T1

Standard functions
- **Chinese character display**
- **Stop switch is provided.**

Option
- **Enable switch is provided.**

How to Order

LEC – T1 – 3 J G

Teaching box

Cable length

3	3 m

Initial language

J	Japanese
E	English

Stop switch

G	Equipped with stop switch

Enable switch

Nil	None
S	Equipped with enable switch

∗ Interlock switch for jog test function

Specifications

Item	Description
Switch	Stop switch, Enable switch (Option)
Cable length	3 m
Enclosure	IP64 (Except connector)
Operating temperature range (°C)	5 to 50 (No condensation)
Operating humidity range (%)	35 to 85
Weight (g)	350 (Except cable)

∗ The EMC compliance for the teaching box was tested with LECP6 controller and applicable actuator only.

Easy Mode

Function	Description
Step data	• Setting of step data
Jog	• Jog operation • Return to origin
Test	• 1 step operation • Return to origin
Monitor	• Display of axis and step data No. • Display of two items selected (Position, Speed, Force)
Alarm	• Display of active alarm • Alarm reset
TB setting	• Reconnection of axis • Setting of easy normal mode • Setting of step data and selection of item for monitoring function

Menu Operations Flowchart

Menu
- Data
- Monitor
- Jog
- Test
- Alarm
- TB setting

Data
Step data No.
Setting of two items selected below
(Position, Speed, Force, Acceleration, Deceleration)

Monitor
Display of step No.
Display of two items selected below
(Position, Speed, Force)

Jog
Return to origin
Jog operation

Test
1 step operation

Alarm
Display of active alarm
Alarm reset

TB setting
Reconnect
Easy/Normal
Set item

Normal Mode

Function	Description
Step data	• Step data setting
Parameter	• Parameters setting
Test	• Jog operation/Constant rate movement • Return to origin • Test drive (Specify a maximum of 5 step data and operate.) • Compulsory output (Compulsory signal output, Compulsory terminal output)
Monitor	• Drive monitor • Output signal monitor • Input signal monitor • Output terminal monitor • Input terminal monitor
Alarm	• Active alarm display (Alarm reset) • Alarm log record display
File	• Data saving Save the step data and parameters of the controller which is being used for communication (it is possible to save four files, with one set of step data and parameters defined as one file). • Load to controller Loads the data which is saved in the teaching box to the controller which is being used for communication. • Delete the saved data.
TB setting	• Display setting (Easy/Normal mode) • Language setting (Japanese/English) • Backlight setting • LCD contrast setting • Beep sound setting • Max. connection axis • Distance unit (mm/inch)
Reconnect	• Reconnection of axis

Menu Operations Flowchart

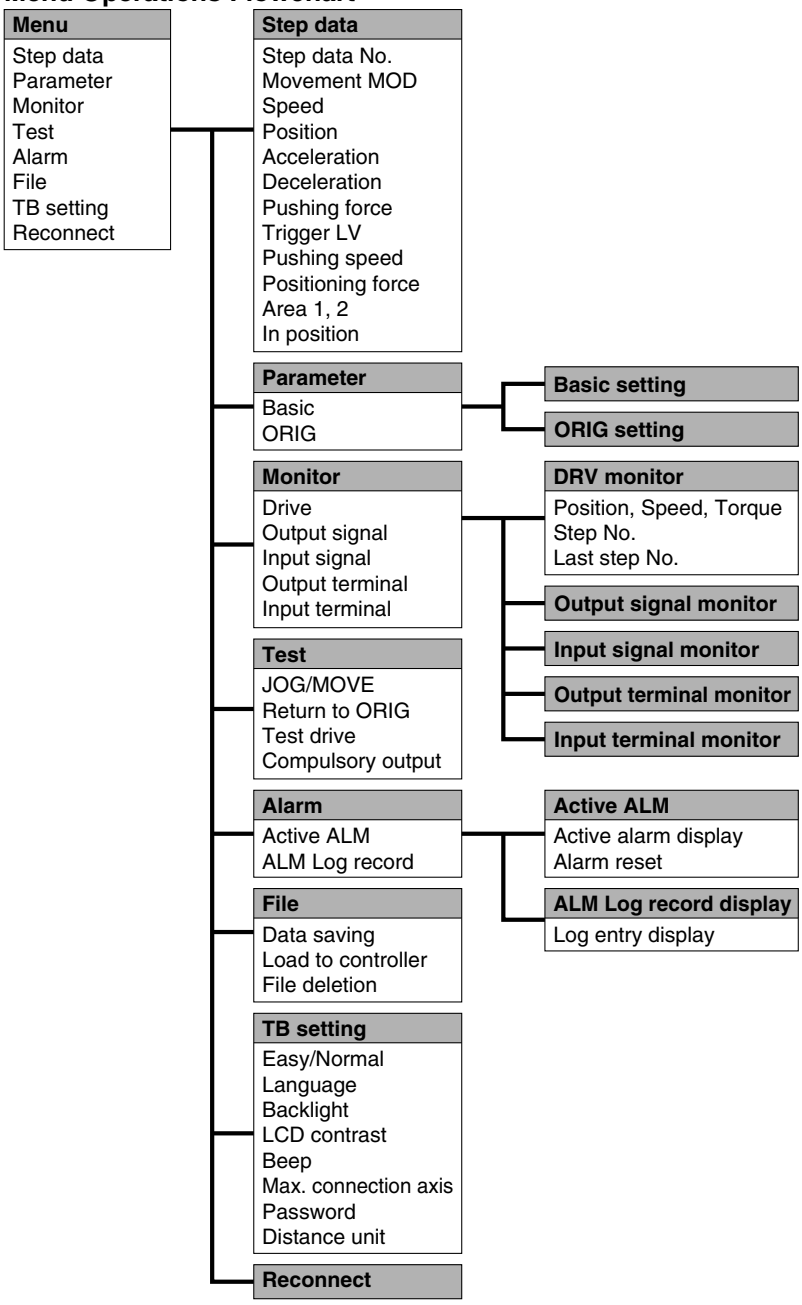

Dimensions

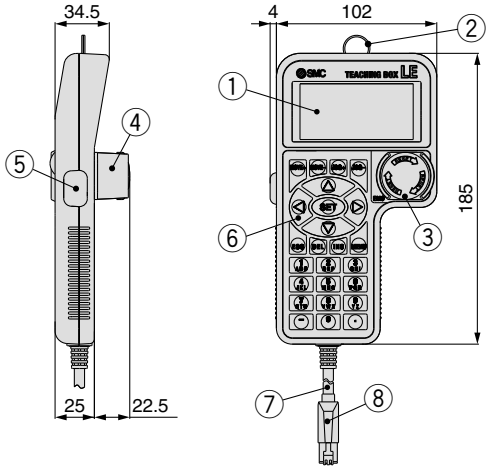

No.	Description	Function
1	**LCD**	A screen of liquid crystal display (with backlight)
2	**Ring**	A ring for hanging the teaching box
3	**Stop switch**	Locks and stops operation when this switch is pressed. The lock is released when it is turned to the right.
4	**Stop switch guard**	A guard for the stop switch
5	**Enable switch (Option)**	Prevents unintentional operation (unexpected operation) of the jog test function. Other functions such as data change are not covered.
6	**Key switch**	Switch for each input
7	**Cable**	Length: 3 meters
8	**Connector**	A connector connected to CN4 of the controller

Series LEC
Controller and Peripheral Devices/ Specific Product Precautions 1

Be sure to read before handling.
Refer to back page 1 for Safety Instructions.

Design/Selection

⚠Warning

1. Be sure to apply the specified voltage.
Otherwise, malfunction and breakage may be caused. If the applied voltage is lower than the specified, it is possible that the load cannot be moved due to an internal voltage drop of the controller. Please check the operating voltage before use.

2. Do not operate the product beyond the specifications.
Otherwise, a fire, malfunction or actuator damage can result. Please check the specifications before use.

3. Install an emergency stop circuit outside of the enclosure.
Please install an emergency stop outside of the enclosure so that it can stop the system operation immediately and intercept the power supply.

4. In order to prevent damage due to the breakdown and the malfunction of the controller and its peripheral devices, a backup system should be established previously by giving a multiple-layered structure or a fail-safe design to the equipment, etc.

5. If a danger against the personnel is expected due to an abnormal heat generation, smoking, ignition, etc., of the controller and its peripheral devices, cut off the power supply for the product and the system immediately.

Handling

⚠Warning

1. Do not touch the inside of the controller and its peripheral devices.
It may cause an electric shock or damage to the controller.

2. Do not perform the operation or setting of the product with wet hands.
It may cause an electric shock.

3. Product with damage or the one lacking of any components should not be used.
It may cause an electric shock, fire, or injury.

4. Use only the specified combination between the electric actuator and controller.
It may cause damage to the actuator or the controller.

5. Be careful not to be caught or hit by the workpiece while the actuator is moving.
It may cause an injury.

6. Do not connect the power supply or power on the product before confirming the area to which the workpiece moves is safe.
The movement of the workpiece may cause an accident.

7. Do not touch the product when it is energized and for some time after power has been disconnected, as it is very hot.
It may lead to a burn due to the high temperature.

8. Check the voltage using a tester for more than 5 minutes after power-off in case of installation, wiring and maintenance.
It may cause an electric shock, fire, or injury.

Handling

⚠Warning

9. Static electricity may cause malfunction or break the controller. Do not touch the controller while power is supplied.
When touching the controller for maintenance, take sufficient measures to eliminate static electricity.

10. Do not use the product in an area where dust, powder dust, water, chemicals or oil is in the air.
It will cause failure or malfunction.

11. Do not use the product in an area where a magnetic field is generated.
It will cause failure or malfunction.

12. Do not install the product in the environment of flammable gas, explosive gas and corrosive gas.
It could lead to fire, explosion and corrosion.

13. Radiant heat from strong heat supplies such as a furnace, direct sunlight, etc., should not be applied to the product.
It will cause failure of the controller or its peripheral devices.

14. Do not use the product in an environment subject to a temperature cycle.
It will cause failure of the controller or its peripheral devices.

15. Do not use the product in a place where surges are generated.
When there are units that generate a large amount of surge around the product (e.g., solenoid type lifters, high frequency induction furnaces, motors, etc.), this may cause deterioration or damage to the product's internal circuit. Avoid supplies of surge generation and crossed lines.

16. Do not install the product in an environment under the effect of vibrations and impacts.
It will cause failure or malfunction.

17. When a surge generating load such as a relay or solenoid valve is directly driven, use a product that incorporates a surge absorption element.

Installation

⚠Warning

1. Install the controller and its peripheral devices on a fire-proof material.
A direct installation on or near a flammable material may cause fire.

2. Do not install the product in a place subject to vibrations and impacts.
It will cause failure or malfunction.

3. Do not mount the controller and its peripheral devices together with a large-sized electromagnetic contactor or no-fuse breaker, which generates vibration, on the same panel. Mount them on different panels, or keep the controller and its peripheral devices away from such a vibration supply.

4. Install the controller and its peripheral devices on a flat surface.
If the mounting surface is distorted or not flat, an unacceptable force may be added to the housing, etc., to cause troubles.

Controller and Peripheral Devices/ Specific Product Precautions 2

Be sure to read before handling.
Refer to back page 1 for Safety Instructions.

Power Supply

⚠Caution

1. **Use a power supply that has low noise between lines and between power and ground.**
   In cases where noise is high, an isolation transformer should be used.
2. **The power supplies should be separated between the controller power and the I/O signal power and both of them do not use the power supply of "inrush current prevention type".**
   If the power supply is "inrush current prevention type", a voltage drop may be caused during the acceleration of the actuator.
3. **To prevent surges from lightning, an appropriate measure should be taken. Ground the surge absorber for lightning separately from the grounding of the controller and its peripheral devices.**

Grounding

⚠Warning

1. **Be sure to carry out grounding in order to ensure the noise tolerance.**
2. **Dedicated grounding should be used.**
   Grounding should be to a D-class ground. (Ground resistance of 100 Ω or less)
3. **Grounding should be performed near the controller and its peripheral devices to shorten the grounding distance.**
4. **In the unlikely event that malfunction is caused by ground, please disconnect the unit from ground.**

Maintenance

⚠Warning

1. **Perform a maintenance check periodically.**
   Confirm wiring and screws are not loose.
   Loose screws or wires may cause unintentional malfunction.
2. **Conduct an appropriate functional inspection after completing the maintenance.**
   At times where the equipment or machinery does not operate properly, conduct an emergency stop of the system. Otherwise, an unexpected malfunction may occur and it will become impossible to secure the safety. Conduct a test of the emergency stop in order to confirm the safety of the equipment.
3. **Do not disassemble, modify or repair the controller and its peripheral devices.**
4. **Do not put anything conductive or flammable inside of the controller.**
   It may cause a fire.
5. **Do not conduct an insulation resistance test and withstand voltage test on this product.**
6. **Ensure sufficient space for maintenance activities.**
   Design the system that allows required space for maintenance.

⚠ Safety Instructions

These safety instructions are intended to prevent hazardous situations and/or equipment damage. These instructions indicate the level of potential hazard with the labels of **"Caution," "Warning"** or **"Danger."** They are all important notes for safety and must be followed in addition to International Standards (ISO/IEC)*1), and other safety regulations.

⚠ Caution: **Caution** indicates a hazard with a low level of risk which, if not avoided, could result in minor or moderate injury.

⚠ Warning: **Warning** indicates a hazard with a medium level of risk which, if not avoided, could result in death or serious injury.

⚠ Danger : **Danger** indicates a hazard with a high level of risk which, if not avoided, will result in death or serious injury.

*1) ISO 4414: Pneumatic fluid power – General rules relating to systems.
ISO 4413: Hydraulic fluid power – General rules relating to systems.
IEC 60204-1: Safety of machinery – Electrical equipment of machines.
(Part 1: General requirements)
ISO 10218-1: Manipulating industrial robots - Safety.
etc.

⚠Warning

1. The compatibility of the product is the responsibility of the person who designs the equipment or decides its specifications.
Since the product specified here is used under various operating conditions, its compatibility with specific equipment must be decided by the person who designs the equipment or decides its specifications based on necessary analysis and test results. The expected performance and safety assurance of the equipment will be the responsibility of the person who has determined its compatibility with the product. This person should also continuously review all specifications of the product referring to its latest catalog information, with a view to giving due consideration to any possibility of equipment failure when configuring the equipment.

2. Only personnel with appropriate training should operate machinery and equipment.
The product specified here may become unsafe if handled incorrectly. The assembly, operation and maintenance of machines or equipment including our products must be performed by an operator who is appropriately trained and experienced.

3. Do not service or attempt to remove product and machinery/equipment until safety is confirmed.
1. The inspection and maintenance of machinery/equipment should only be performed after measures to prevent falling or runaway of the driven objects have been confirmed.
2. When the product is to be removed, confirm that the safety measures as mentioned above are implemented and the power from any appropriate source is cut, and read and understand the specific product precautions of all relevant products carefully.
3. Before machinery/equipment is restarted, take measures to prevent unexpected operation and malfunction.

4. Contact SMC beforehand and take special consideration of safety measures if the product is to be used in any of the following conditions.
1. Conditions and environments outside of the given specifications, or use outdoors or in a place exposed to direct sunlight.
2. Installation on equipment in conjunction with atomic energy, railways, air navigation, space, shipping, vehicles, military, medical treatment, combustion and recreation, or equipment in contact with food and beverages, emergency stop circuits, clutch and brake circuits in press applications, safety equipment or other applications unsuitable for the standard specifications described in the product catalog.
3. An application which could have negative effects on people, property, or animals requiring special safety analysis.
4. Use in an interlock circuit, which requires the provision of double interlock for possible failure by using a mechanical protective function, and periodical checks to confirm proper operation.

⚠Caution

1. The product is provided for use in manufacturing industries.
The product herein described is basically provided for peaceful use in manufacturing industries.
If considering using the product in other industries, consult SMC beforehand and exchange specifications or a contract if necessary.
If anything is unclear, contact your nearest sales branch.

Limited warranty and Disclaimer/ Compliance Requirements

The product used is subject to the following "Limited warranty and Disclaimer" and "Compliance Requirements".
Read and accept them before using the product.

Limited warranty and Disclaimer

1. The warranty period of the product is 1 year in service or 1.5 years after the product is delivered.*2)
Also, the product may have specified durability, running distance or replacement parts. Please consult your nearest sales branch.
2. For any failure or damage reported within the warranty period which is clearly our responsibility, a replacement product or necessary parts will be provided.
This limited warranty applies only to our product independently, and not to any other damage incurred due to the failure of the product.
3. Prior to using SMC products, please read and understand the warranty terms and disclaimers noted in the specified catalog for the particular products.

***2) Vacuum pads are excluded from this 1 year warranty.**
A vacuum pad is a consumable part, so it is warranted for a year after it is delivered.
Also, even within the warranty period, the wear of a product due to the use of the vacuum pad or failure due to the deterioration of rubber material are not covered by the limited warranty.

Compliance Requirements

1. The use of SMC products with production equipment for the manufacture of weapons of mass destruction (WMD) or any other weapon is strictly prohibited.
2. The exports of SMC products or technology from one country to another are governed by the relevant security laws and regulations of the countries involved in the transaction. Prior to the shipment of a SMC product to another country, assure that all local rules governing that export are known and followed.

⚠ Safety Instructions	Be sure to read "Handling Precautions for SMC Products" (M-E03-3) before using.

SMC

Controller

Programless Type ····· Page 65

Step Motor
(Servo/24 VDC)

Series LECP1

Programless Controller

Series LECP1

How rder

LE C P 1 N 1 – LEHZ10LK2-4

Controller

Compatible motor

P	Step motor (Servo/24 VDC)

Number of step data (Points)

1	14 (Programless)

Parallel I/O type

N	NPN
P	PNP

I/O cable length [m]

Nil	Without cable
1	1.5
3	3
5	5

Actuator part number

(Except cable specifications and actuator options)
Example: Enter [LEHZ10LK2-4] for
LEHZ10LK2-4AF-R16N1

∗ **When placing an order for the controller with an actuator, this part number is not necessary.**

The controller is sold as single unit after the compatible actuator is set.

Confirm that the combination of the controller and the actuator is correct.

∗ Refer to the operation manual for using the products. Please download it via our website. http://www.smcworld.com

Specifications

Basic Specifications

Item	LECP1
Compatible motor	Step motor (Servo/24 VDC)
Power supply Note 1)	Power supply voltage: 24 VDC ±10% Max. current consumption: 3A (Peak 5A) Note 2) [Including the motor drive power, control power supply, stop, lock release]
Parallel input	6 inputs (Photo-coupler isolation)
Parallel output	6 outputs (Photo-coupler isolation)
Stop points	14 points (Position number 1 to 14(E))
Compatible encoder	Incremental A/B phase (800 pulse/rotation)
Serial communication	RS485 (Modbus protocol compliant)
Memory	EEPROM
LED indicator	LED (Green/Red) one of each
7-segment LED display Note 3)	1 digit, 7-segment display (red) Figures are expressed in hexadecimal ("10" to "15" in decimal number are expressed as "A" to "F")
Lock control	Forced-lock release terminal Note 4)
Cable length [m]	I/O cable: 5 or less Actuator cable: 20 or less
Cooling system	Natural air cooling
Operating temperature range	32 to 104°F (0 to 40°C) (No freezing)
Operating humidity range [%RH]	90 or less (No condensation)
Storage temperature range	14 to 140°F (–10 to 60°C) (No freezing)
Storage humidity range [%RH]	90 or less (No condensation)
Insulation resistance [MΩ]	Between the housing (radiation fin) and SG terminal 50 (500 VDC)
Weight	0.29 lbs (130 g)

Note 1) Do not use the power supply of "inrush current prevention type" for the controller input power supply.
Note 2) The power consumption changes depending on the actuator model. Refer to the each actuator's operation manual etc. for details.
Note 3) "10" to "15" in decimal number are displayed as follows in the 7-segment LED.

Decimal display	10	11	12	13	14	15
Hexadecimal display	A	b	c	d	E	F

Note 4) Applicable to non-magnetizing lock.

Details of The Controller

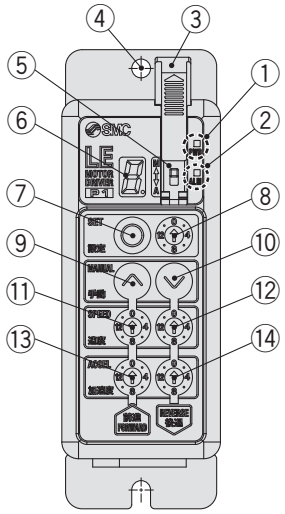

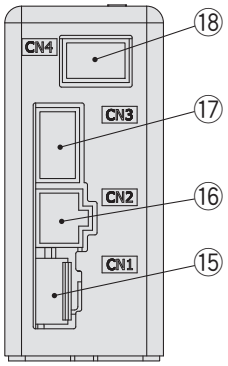

No.	Display	Description	Details
①	**PWR**	Power supply LED	Power supply ON/servo ON :Green turns on Power supply ON/servo OFF :Green flashes
②	**ALM**	Alarm LED	With alarm : Red turns on Parameter setting : Red flashes
③	—	Cover	Change and protection of the mode SW (Close the cover after changing SW)
④	—	FG	Frame ground (Tighten the bolt with the nut when mounting the controller. Connect the ground wire.)
⑤	—	Mode swith	Switch the mode between manual and auto.
⑥	—	7-segment LED	Stop position, the value set by ⑧ and alarm information are displayed.
⑦	**SET**	Set button	Decide the settings or drive operation in Manual mode.
⑧	—	Position selecting switch	Assign the position to drive (1 to 14), and the origin position (15).
⑨	**MANUAL**	Manual forward button	Perform forward jog and inching.
⑩		Manual reverse button	Perform reverse jog and inching.
⑪	**SPEED**	Forward speed switch	16 forward speeds are available.
⑫		Reverse speed switch	16 reverse speeds are available.
⑬	**ACCEL**	Forward acceleration switch	16 forward acceleration steps are available.
⑭		Reverse acceleration switch	16 reverse acceleration steps are available.
⑮	**CN1**	Power supply connector	Connect the power supply cable.
⑯	**CN2**	Motor connector	Connect the motor connector.
⑰	**CN3**	Encoder connector	Connect the encoder connector.
⑱	**CN4**	I/O connector	Connect I/O cable.

How to Mount

Controller mounting shown below.

1. Mounting screw (LECP1□□-□)

(Installation with two M4 screws)

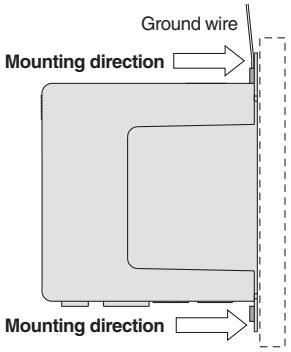

2. Grounding

Tighten the bolt with the nut when mounting the ground wire as shown below.

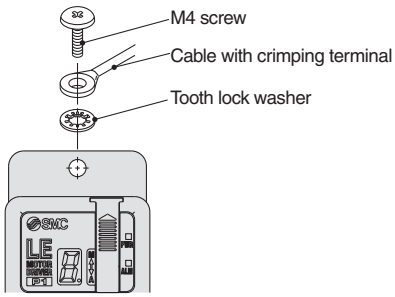

Controller

⚠Caution

- M4 screws, cable with crimping terminal and tooth lock washer are not included. Be sure to carry out grounding earth in order to ensure the noise tolerance.
- Use a watchmaker's screwdriver of the size shown below when changing position switch ⑧ and the set value of the speed/accele ration switch ⑪ to ⑭.

Size
End width **L** :2.0 to 2.4 [mm]
End thickness **W** :0.5 to 0.6 [mm]

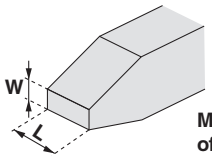

Magnified view of the end of the screwdriver

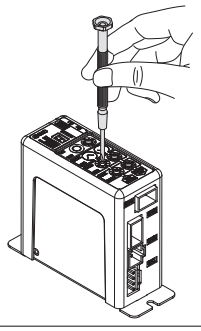

Dimensions

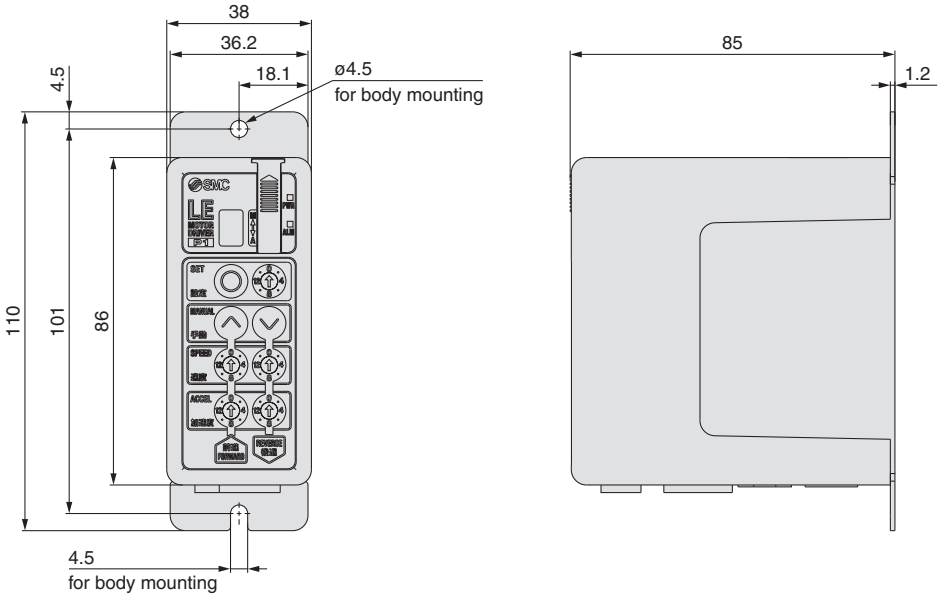
38
36.2
18.1
ø4.5
for body mounting
4.5
110
101
86
4.5
for body mounting
85
1.2

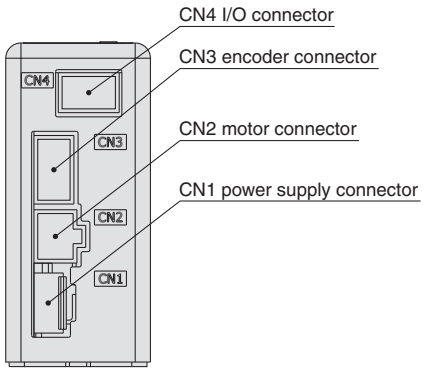
CN4 I/O connector
CN3 encoder connector
CN2 motor connector
CN1 power supply connector
CN4
CN3
CN2
CN1

Wiring Example 1

Power Supply Connector: CN1

* When you connect a CN1 power supply connector, please use the power supply cable (LEC-CK1-1).
* Power supply cable (LEC-CK1-1) is an accessory.

CN1 Power Supply Connector Terminal for LECP1

Terminal name	Cable color	Function	Function details
0V	Blue	Common supply (–)	M24V terminal/C24V terminal/BK RLS terminal are common (–).
M24V	White	Motor power supply (+)	This is the motor power supply (+) that is supplied to the controller.
C24V	Brown	Control power supply (+)	This is the control power supply (+) that is supplied to the controller.
BK RLS	Black	Lock release (+)	This is the input (+) that releases the lock.

Power supply cable for LECP1 (LEC-CK1-1)

Wiring Example 2

Parallel I/O Connector: CN4

* When you connect a PLC, etc., to the CN4 parallel I/O connector, please use the I/O cable (LEC-CK4-□).
* The wiring should be changed depending on the type of the parallel I/O (NPN or PNP). Please wire referring to the following diagram.

■NPN

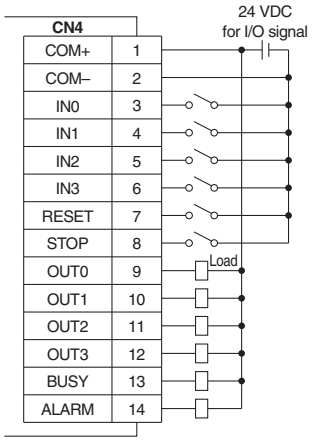

■PNP

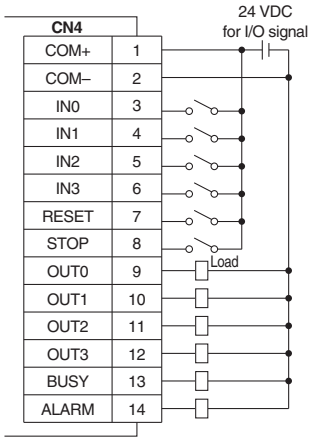

Input Signal

Name	Contents
COM+	Connects the power supply 24 V for input/output signal
COM–	Connects the power supply 0 V for input/output signal
IN0 to IN3	• Instruction to drive (input as a combination of IN0 to IN3) • Instruction to return to the origin position (IN0 to IN3 all ON simultaneously) Example - (instruction to drive for position no. 5) IN3: OFF, IN2: ON, IN1: OFF, IN0: ON
RESET	Alarm reset and operation interruption During operation : deceleration stop from position at which signal is input (servo ON maintained) While alarm is active : alarm reset
STOP	Instruction to stop (after maximum deceleration stop, servo OFF)

Output Signal

Name	Contents
OUT0 to OUT3	Turns on when the positioning or pushing is completed. (Output is instructed in the combination of OUT0 to 3.) Example - (operation complete for position no. 3) OUT3: OFF, OUT2: OFF, OUT1: ON, OUT0: ON
BUSY	Outputs when the actuator is moving
*ALARM Note)	Not output when alarm is active or servo OFF

Note) These signals are output when the power supply of the controller is ON. (N.C.)

Input Signal [IN0 - IN3] Position Number Chart ○: OFF ●: ON

Position number	IN3	IN2	IN1	IN0
1	○	○	○	●
2	○	○	●	○
3	○	○	●	●
4	○	●	○	○
5	○	●	○	●
6	○	●	●	○
7	○	●	●	●
8	●	○	○	○
9	●	○	○	●
10 (A)	●	○	●	○
11 (B)	●	○	●	●
12 (C)	●	●	○	○
13 (D)	●	●	○	●
14 (E)	●	●	●	○
Retun to origin	●	●	●	●

Output Signal [OUT0 - OUT3] Position Number Chart ○: OFF ●: ON

Position number	OUT3	OUT2	OUT1	OUT0
1	○	○	○	●
2	○	○	●	○
3	○	○	●	●
4	○	●	○	○
5	○	●	○	●
6	○	●	●	○
7	○	●	●	●
8	●	○	○	○
9	●	○	○	●
10 (A)	●	○	●	○
11 (B)	●	○	●	●
12 (C)	●	●	○	○
13 (D)	●	●	○	●
14 (E)	●	●	●	○
Retun to origin	●	●	●	●

Signal Timing

(1) Return to Origin

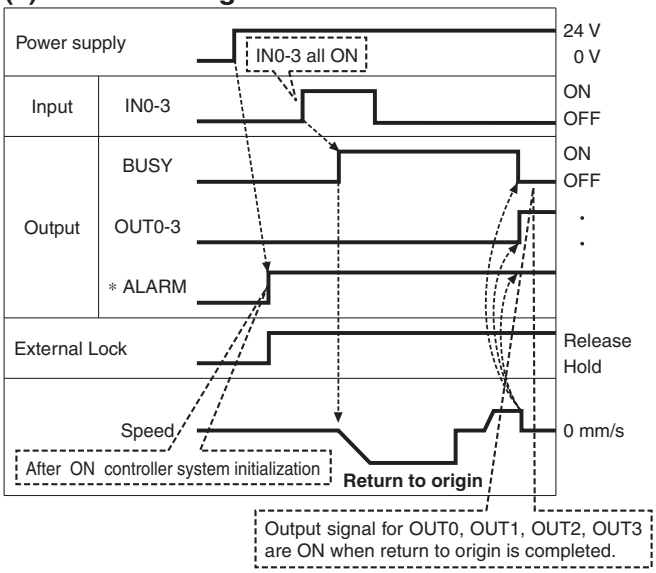

∗ "∗ALARM" is expressed as negative-logic circuit.

(2) Positioning Operation

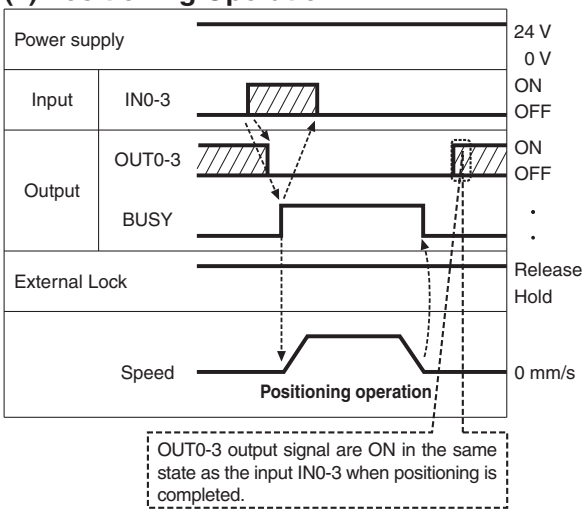

(3) Cut-off Stop (Reset Stop)

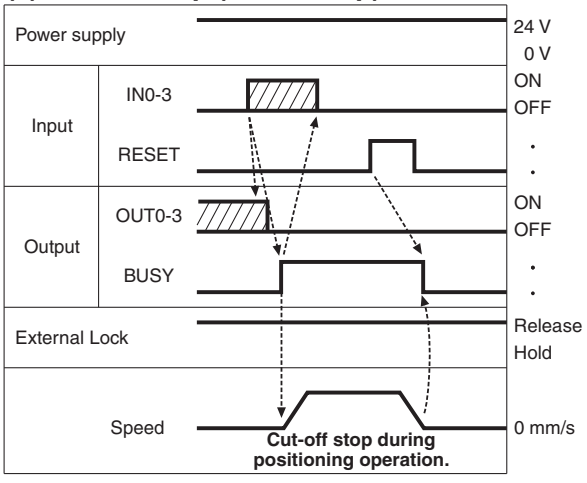

(4) Stop by The STOP Signal

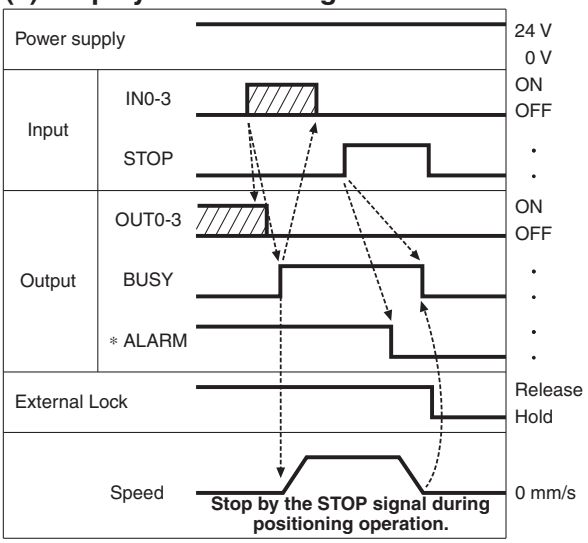

(5) Alarm Reset

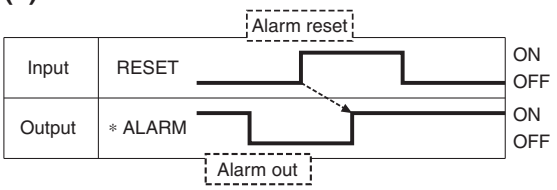

∗ "∗ALARM" is expressed as negative-logic circuit.

Options: Actuator Cable

[Robotic cable for step motor (Servo/24 VDC), standard cable]

LE – CP – 1 – ☐

Cable length (L)[m]

1	1.5
3	3
5	5
8	8*
A	10*
B	15*
C	20*

* Produced upon receipt of order (Robotic cable only)

Cable type

Nil	Robotic cable (Flexible cable)
S	Standard cable

LE-CP-$^{1}_{3}$$_{5}$/Cable length: 1.5 m, 3 m, 5 m

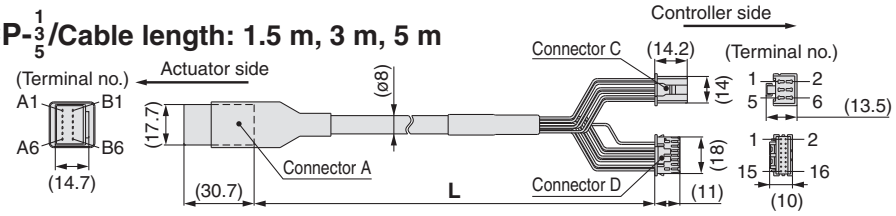

LE-CP-$^{8}_{A}$$^{B}_{C}$/Cable length: 8 m, 10 m, 15 m, 20 m
(* Produced upon receipt of order)

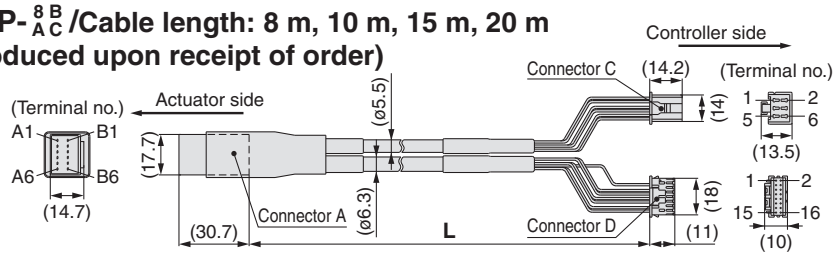

Circuit	Connector A terminal no.	Cable color	Connector C terminal no.
A	B-1	Brown	2
$\overline{A}$	A-1	Red	1
B	B-2	Orange	6
$\overline{B}$	A-2	Yellow	5
COM-A/COM	B-3	Green	3
COM-B/–	A-3	Blue	4
		Shield	
Vcc	B-4	Brown	12
GND	A-4	Black	13
$\overline{A}$	B-5	Red	7
A	A-5	Black	6
$\overline{B}$	B-6	Orange	9
B	A-6	Black	8
		—	3

Cable color	Connector D terminal no.
Brown	12
Black	13
Red	7
Black	6
Orange	9
Black	8
—	3

Options

[Power supply cable]

LEC − CK1 − 1

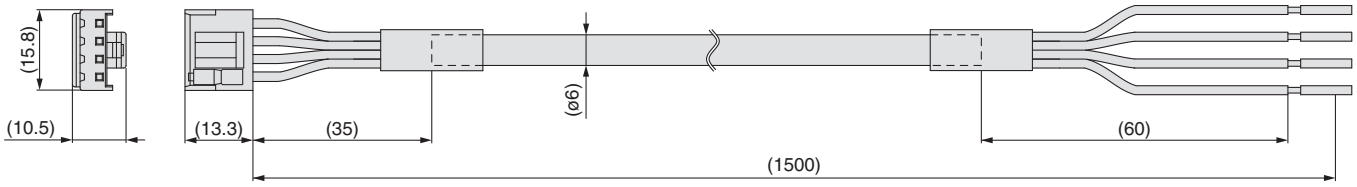

Terminal name	Color of covered wire	Function
0V	Blue	Common supply (–)
M24V	White	Motor power supply (+)
C24V	Brown	Control power supply (+)
BK RLS	Black	Lock release (+)

∗ Conductor size: AWG20

[I/O cable]

LEC − CK4 − □

Cable length (L)[m]

1	1.5
3	3
5	5

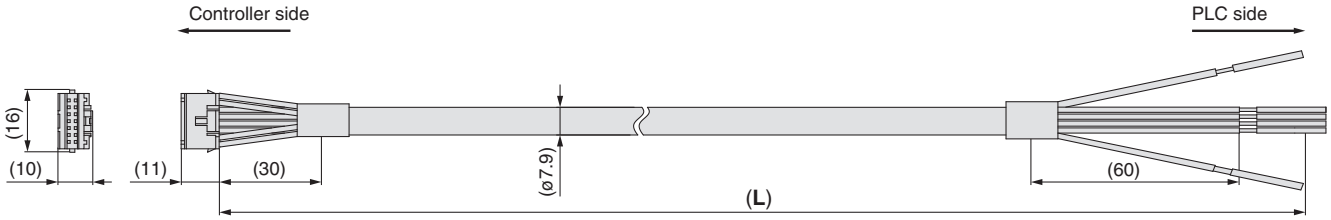

∗ Conductor size: AWG26

Terminal no.	Insulation color	Dot mark	Dot color	Function
1	Light brown	■	Black	COM +
2	Light brown	■	Red	COM −
3	Yellow	■	Black	OUT0
4	Yellow	■	Red	OUT1
5	Light green	■	Black	OUT2
6	Light green	■	Red	OUT3
7	Gray	■	Black	BUSY
8	Gray	■	Red	ALARM
9	White	■	Black	IN0
10	White	■	Red	IN1
11	Light brown	■ ■	Black	IN2
12	Light brown	■ ■	Red	IN3
13	Yellow	■ ■	Black	RESET
14	Yellow	■ ■	Red	STOP

∗ Parallel I/O signal is valid in auto mode. While the test function operates at manual mode, only the output is valid.

Step Motor Controller
(Servo/24 VDC)

Series LECP6

Servo Motor Controller
(24 VDC)

Series LECA6

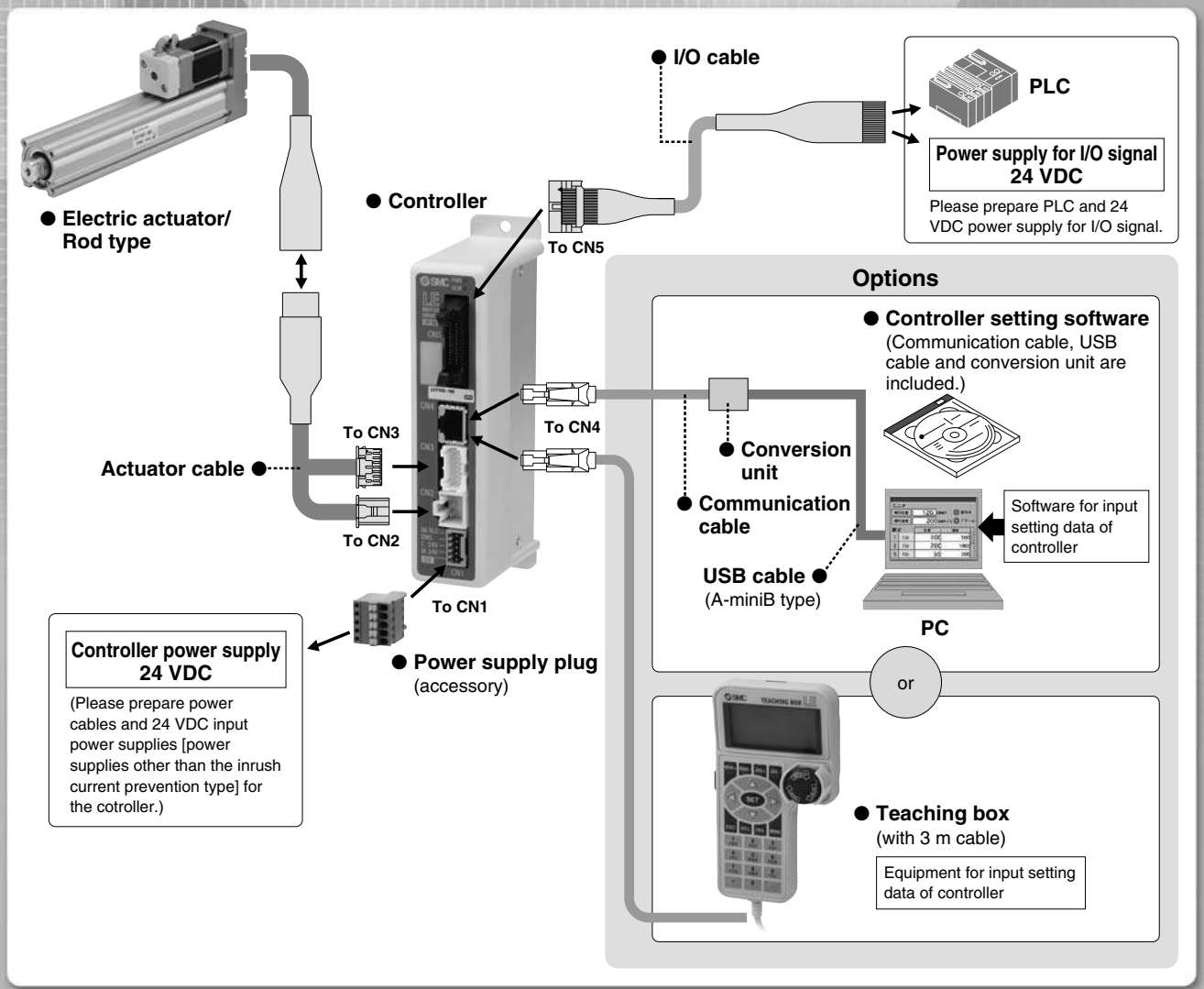

Step Motor Controller (Servo/24 VDC)
Series LECP6
Servo Motor Controller (24 VDC)
Series LECA6

Series ***LECP6*** *Series* ***LECA6***

How to Order

⚠Caution

Note 1) CE-compliant products

① EMC compliance was tested by combining the electric actuator LEY series and the controller LEC series. The EMC depends on the configuration of the customer's control panel and the relationship with other electrical equipment and wiring. Therefore conformity to the EMC directive cannot be certified for SMC components incorporated into the customer's equipment under actual operating conditions. As a result it is necessary for the customer to verify conformity to the EMC directive for the machinery and equipment as a whole.

② For the LECA6 series (servo motor controller), EMC compliance was tested by installing a noise filter set (LEC-NFA). Refer to page 26 for the noise filter set. Refer to the LECA Operation Manual for installation.

LE C P 6 N □ □ – □

Actuator

Controller

Compatible motor

P	Step motor (Servo/24 VDC)
A	Servo motor (24 VDC) Note 1)

Number of step data

6	64 points

Parallel I/O type

N	NPN
P	PNP

I/O cable length

Nil	Without cable
1	1.5 m
3	3 m
5	5 m

Actuator part number

(Except cable specifications and actuator options)
Example: Enter [LEY16B-100] for LEY16B-100-R16N1

Option

Nil	Screw mounting
D Note 2)	DIN rail mounting

Note 2) DIN rail is not included. Order it separately.

∗ When controller equipped type (-P6□□) is selected when ordering the LE series, you do not need to order this controller.

The controller is sold as single unit after the compatible actuator is set.

Confirm that the combination of the controller and the actuator is compatible.

<Be sure to check the following before use.>

① Check that actuator label for model number. This matches the controller.

② Check Parallel I/O configuration matches (NPN or PNP).

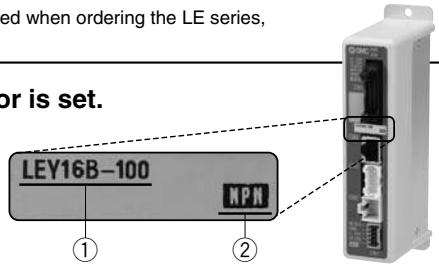

Specifications

Basic Specifications

Item	LECP6	LECA6
Compatible motor	Unipolar connection type 2-phase HB step motor	AC servo motor
Power supply Note 1)	Power voltage: 24 VDC ±10% Current consumption: 3 A (Peak 5 A) Note 2) [Including motor drive power, control power, stop, lock release]	Power voltage: 24 VDC ±10% Current consumption: 3 A (Peak 10 A) Note 2) [Including motor drive power, control power, stop, lock release]
Parallel input	11 inputs (Photo-coupler isolation)	
Parallel output	13 outputs (Photo-coupler isolation)	
Compatible encoder	A/B phase, Line receiver input Resolution 800 p/r	A/B/Z phase, Line receiver input Resolution 800 p/r
Serial communication	RS485 (Modbus protocol compliant)	
Memory	EEPROM	
LED indicator	LED (Green/Red) one of each	
Lock control	Forced-lock release terminal	
Cable length (m)	I/O cable: 5 or less Actuator cable: 20 or less	
Cooling system	Natural air cooling	
Operating temperature range (°F)	32 to 104 (No condensation and freezing)	
Operating humidity range (%)	35 to 85 (No condensation and freezing)	
Storage temperature range (°F)	14 to 140 (No condensation and freezing)	
Storage humidity range (%)	35 to 85 (No condensation and freezing)	
Insulation resistance (MΩ)	Between the housing (radiation fin) and SG terminal 50 (500 VDC)	
Weight (lb)	0.3 (Screw mounting) 0.4 (DIN rail mounting)	

Note 1) Do not use the power supply of "inrush current prevention type" for the controller power supply.

Note 2) The power consumption changes depending on the actuator model. Refer to the specifications of actuator for more details.

How to Mount

a) Screw mounting (LEC□6□□-□)
(Installation with two M4 screws)

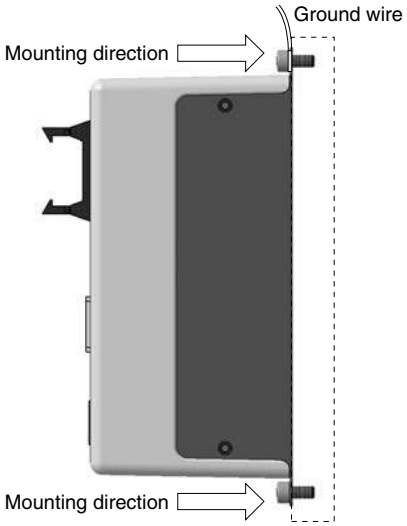

b) DIN rail mounting (LEC□6□□D-□)
(Installation with the DIN rail)

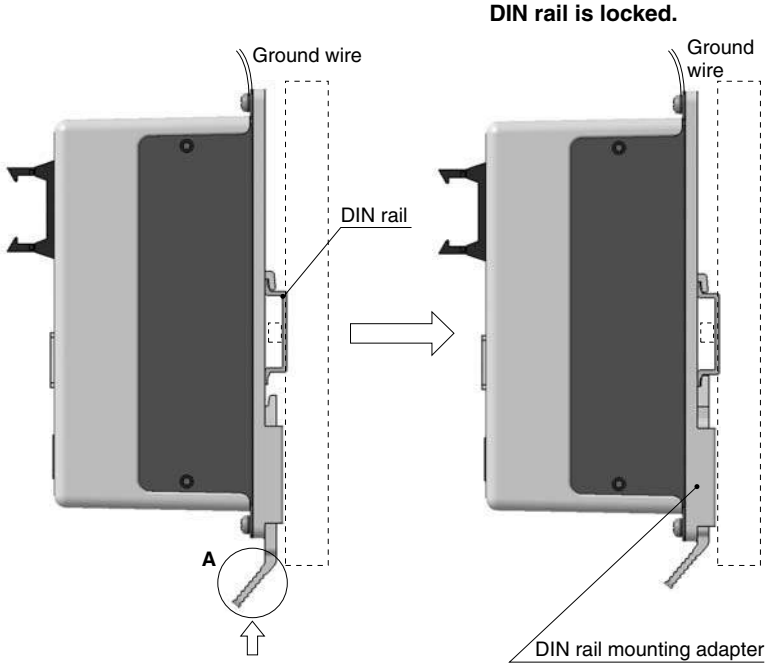

Hook the controller on the DIN rail and press the lever of section **A** in the arrow direction to lock it.

DIN rail
AXT100-DR-□

∗ For □, enter a number from the "No." line in the below table.
Refer to the dimensions on page 20 for the mounting dimensions.

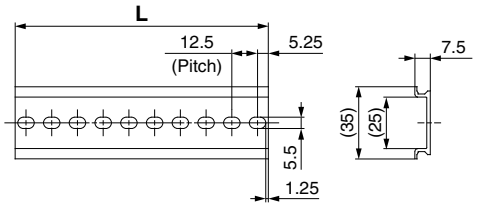

L Dimensions

No.	1	2	3	4	5	6	7	8	9	10	11	12	13	14	15	16	17	18	19	20
L dimension	23	35.5	48	60.5	73	85.5	98	110.5	123	135.5	148	160.5	173	185.5	198	210.5	223	235.5	248	260.5

No.	21	22	23	24	25	26	27	28	29	30	31	32	33	34	35	36	37	38	39	40
L dimension	273	285.5	298	310.5	323	335.5	348	360.5	373	385.5	398	410.5	423	435.5	448	460.5	473	485.5	498	510.5

DIN rail mounting adapter
LEC-D0 (with 2 mounting screws)

This should be used when the DIN rail mounting adapter is mounted onto the screw mounting type controller afterwards.

Dimensions

a) Screw mounting (LEC□6□□-□)

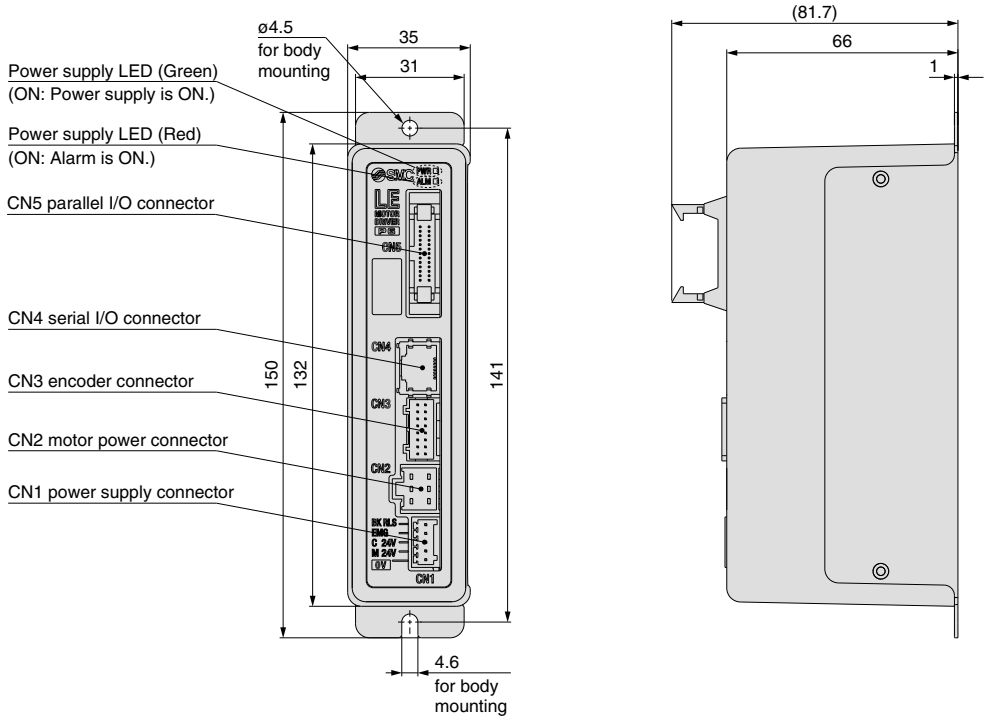

b) DIN rail mounting (LEC□6□□D-□)

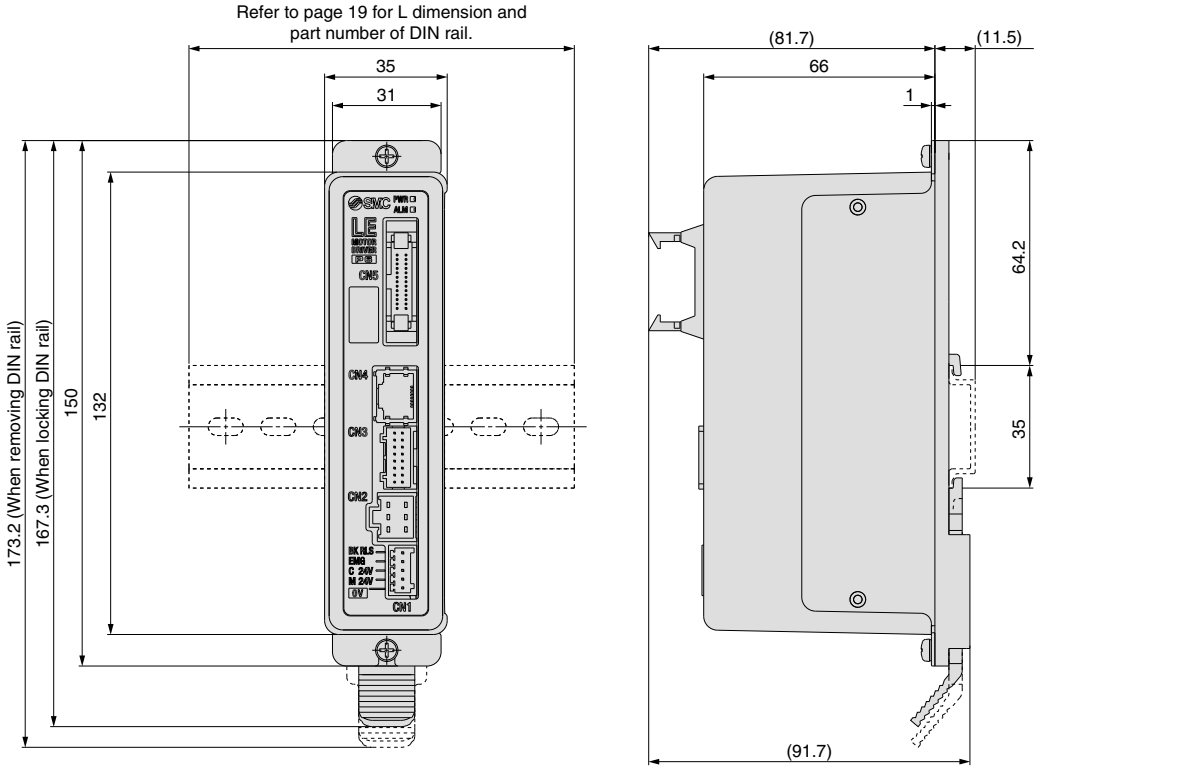

Note) When two or more controllers are used, keep the interval between them 10 mm or more (when the LEY25, 32 are used).

Wiring Example 1

Power Supply Connector: CN1

∗ Power supply plug is an accessory.

CN1 Power Supply Connector Terminal for LECP6 (Phoenix Contact FK-MC0.5/5-ST-2.5)

Terminal name	Function	Function details
0V	Common supply (–)	M24V terminal/C24V terminal/EMG terminal/BK RLS terminal are common (–).
M24V	Motor power supply (+)	This is the motor power supply (+) that is supplied to the controller.
C24V	Control power supply (+)	This is the control power supply (+) that is supplied to the controller.
EMG	Stop (+)	This is the input (+) that releases the stop.
BK RLS	Lock release (+)	This is the input (+) that releases the lock.

CN1 Power Supply Connector Terminal for LECA6 (Phoenix Contact FK-MC0.5/7-ST-2.5)

Terminal name	Function	Function details
0V	Common supply (–)	M24V terminal/C24V terminal/EMG terminal/BK RLS terminal are common (–).
M24V	Motor power supply (+)	This is the motor power supply (+) that is supplied to the controller.
C24V	Control power supply (+)	This is the control power supply (+) that is supplied to the controller.
EMG	Stop (+)	This is the input (+) that releases the stop.
BK RLS	Lock release (+)	This is the input (+) that releases the lock.
RG+	Regenerative output 1	These are the regenerative output terminals for external connection. (It is not necessary to connect them in the combination with standard specification LEY series.)
RG–	Regenerative output 2	

Power supply plug for LECP6

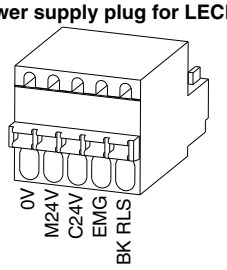

Power supply plug for LECA6

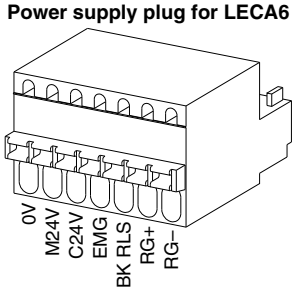

Wiring Example 2

Parallel I/O Connector: CN5

∗ When you connect a PLC, etc., to the CN5 parallel I/O connector, please use the I/O cable (LEC-CN5-□).
∗ The wiring should be changed depending on the type of the parallel I/O (NPN or PNP). Please wire referring to the following diagram.

Wiring diagram

LEC□6N□□-□ (NPN)

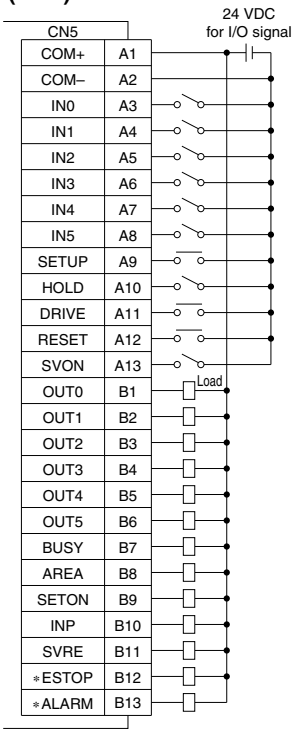

LEC□6P□□-□ (PNP)

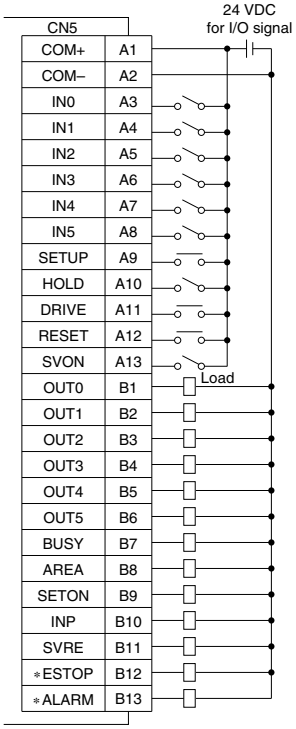

Input Signal

Name	Contents
COM+	Connects the power supply 24 V for input/output signal
COM–	Connects the power supply 0 V for input/output signal
IN0 to IN5	Step data specified Bit No. (Input is instructed in the combination of IN0 to 5.)
SETUP	Instruction to return to the original position
HOLD	Operation is temporarily stopped.
DRIVE	Instruction to drive
RESET	Alarm reset and operation interruption
SVON	Servo ON instruction

Output Signal

Name	Contents
OUT0 to OUT5	Outputs the step data No. during operation
BUSY	Outputs when the actuator is moving
AREA	Outputs within the step data area output setting range
SETON	Outputs when returning to the original position
INP	Outputs when target position or target force is reached (Turns on when the positioning or pushing is completed.)
SVRE	Outputs when servo is on
∗ESTOP Note)	Not output when EMG stop is instructed
∗ALARM Note)	Not output when alarm is generated

Note) These signals are output when the power supply of the controller is ON. (N.C.)

Step Data Setting

1. Step data setting for positioning

In this setting, the actuator moves toward and stops at the target position. The following diagram shows the setting items and operation. The setting items and set values for this operation are stated below.

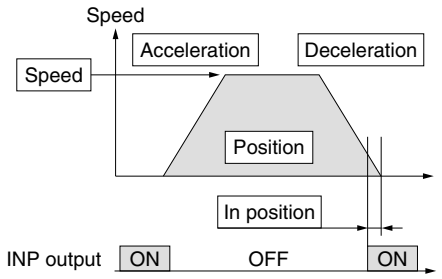

◎: Need to be set.
○: Need to be adjusted as required.
—: Setting is not required.

Step Data (Positioning)

Necessity	Item	Description
◎	Movement MOD	When the absolute position is required, set Absolute. When the relative position is required, set Relative.
◎	Speed	Transfer speed to the target position
◎	Position	Target position
○	Acceleration	Parameter which defines how rapidly the actuator reaches the speed set. The higher the set value, the faster it reaches the speed set.
○	Deceleration	Parameter which defines how rapidly the actuator comes to stop. The higher the set value, the quicker it stops.
◎	Pushing force	Set 0. (If values 1 to 100 are set, the operation will be changed to the pushing operation.)
—	Trigger LV	Setting is not required.
—	Pushing speed	Setting is not required.
○	Positioning force	Max. torque during the positioning operation (No specific change is required.)
○	Area 1, Area 2	Condition that turns on the AREA output signal.
○	In position	Condition that turns on the INP output signal. When the actuator enters the range of [in position], the INP output signal turns on. (It is unnecessary to change this from the initial value.) When it is necessary to output the arrival signal before the operation is completed, make the value larger.

2. Step data setting for pushing

The actuator moves toward the pushing start position, and when it reaches that position, it starts pushing with less than the set force. The following diagram shows the setting items and operation. The setting items and set values for this operation are stated below.

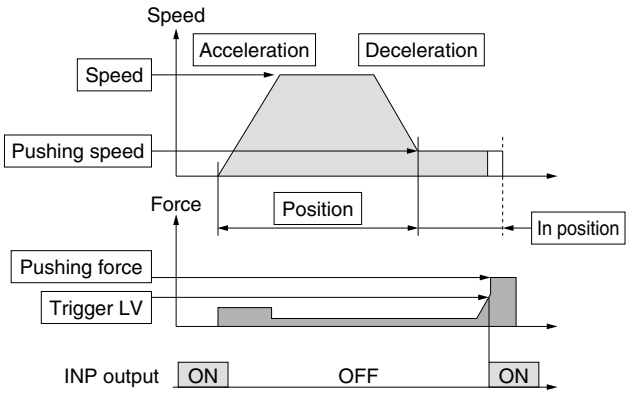

◎: Need to be set.
○: Need to be adjusted as required.

Step Data (Pushing)

Necessity	Item	Description
◎	Movement MOD	When the absolute position is required, set Absolute. When the relative position is required, set Relative.
◎	Speed	Transfer speed to the pushing start position
◎	Position	Pushing start position
○	Acceleration	Parameter which defines how rapidly the actuator reaches the speed set. The higher the set value, the faster it reaches the speed set.
○	Deceleration	Parameter which defines how rapidly the actuator comes to stop. The higher the set value, the quicker it stops.
◎	Pushing force	Pushing force ratio is defined. The setting range differs depending on the electric actuator type. Refer to the operation manual for the electric actuator.
◎	Trigger LV	Condition that turns on the INP output signal. The INP output signal is turned on when the generated force exceeds the value. Threshold level should be less than the pushing force.
○	Pushing speed	Pushing speed When the speed is set fast, the electric actuator and work pieces might be damaged due to the impact when they hit the end, so this set value should be smaller. Refer to the operation manual of the electric actuator.
○	Positioning force	Max. torque during the positioning operation (No specific change is required.)
○	Area 1, Area 2	Condition that turns on the AREA output signal.
◎	In position	Transfer distance during pushing. If the transferred distance exceeds the setting, it stops even if it is not pushing. If the transfer distance is exceeded, the INP output signal will not be turned on.

Signal Timing

Return to Origin

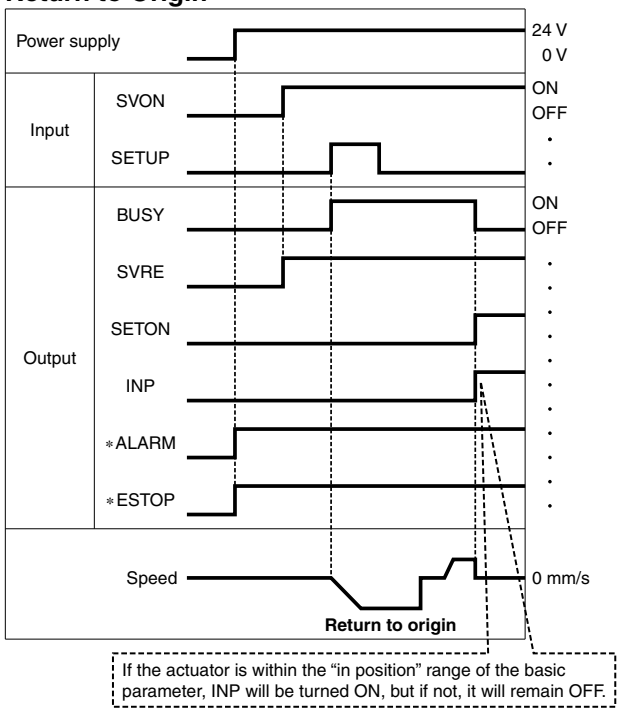

∗ “∗ALARM” and “∗ESTOP” are expressed as negative-logic circuit.

Positioning Operation

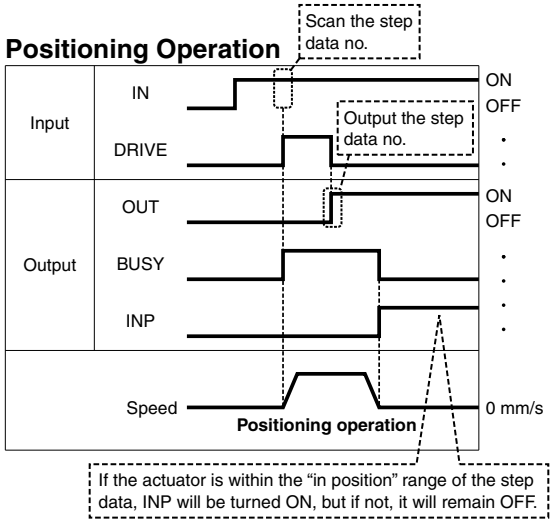

∗ “OUT” is output when “DRIVE” is changed from ON to OFF.
(When power supply is applied, “DRIVE” or “RESET” is turned ON or “∗ESTOP” is turned OFF, all of the “OUT” outputs are turned OFF.)

Pushing Operation

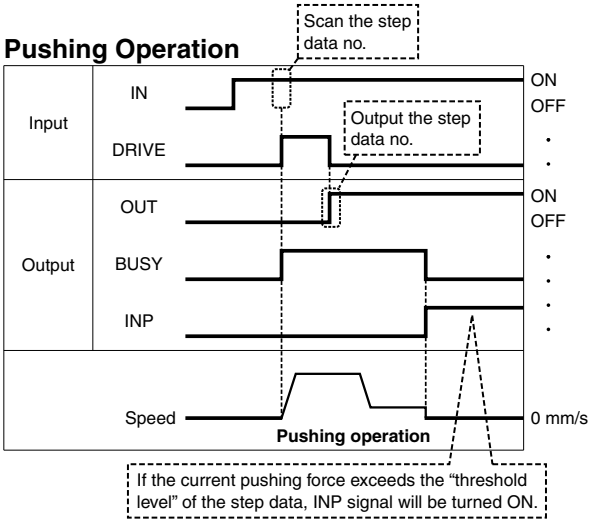

HOLD

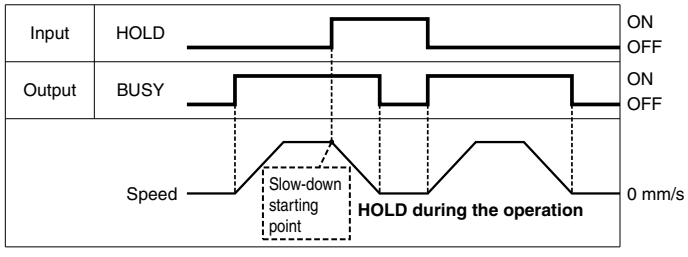

∗ When the actuator is in the positioning range in the pushing operation, it does not stop even if HOLD signal is input.

Reset

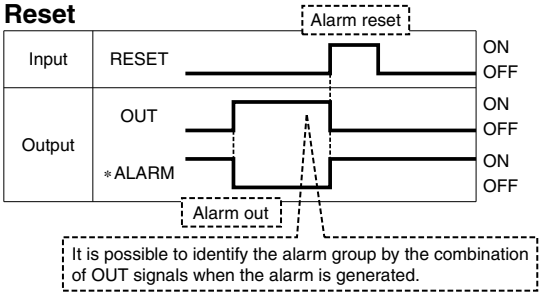

∗ “∗ALARM” and “∗ESTOP” are expressed as negative-logic circuit.

Options

[Actuator cable for step motor (Servo/24 VDC)]

LE – CP – 1

Cable length (L)

1	1.5 m
3	3 m
5	5 m
8	8 m*
A	10 m*
B	15 m*
C	20 m*

∗ Produced upon receipt of order

LE-CP-$^{1}_{5}$/Cable length: 1.5 m, 3 m, 5 m

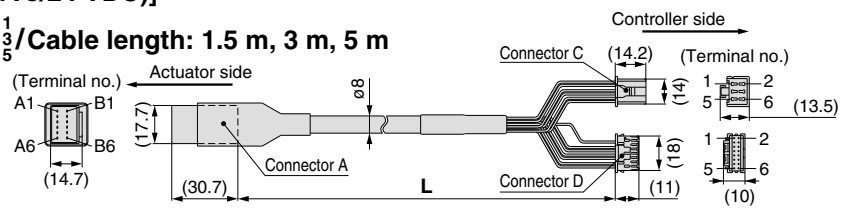

LE-CP-$^{8}_{A}$ $^{B}_{C}$/Cable length: 8 m, 10 m, 15 m, 20 m (∗ Produced upon receipt of order)

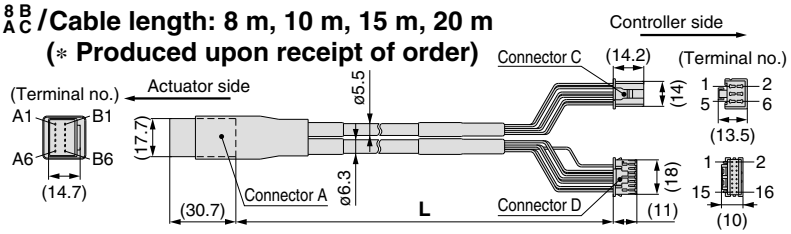

Circuit	Connector A terminal no.	Cable color	Connector C terminal no.
A	B-1	Brown	2
$\overline{A}$	A-1	Red	1
B	B-2	Orange	6
$\overline{B}$	A-2	Yellow	5
COM-A/COM	B-3	Green	3
COM-B/–	A-3	Blue	4
		Shield	
Vcc	B-4	Brown	12
GND	A-4	Black	13
$\overline{A}$	B-5	Red	7
A	A-5	Black	6
$\overline{B}$	B-6	Orange	9
B	A-6	Black	8
		—	3

Cable color	Connector D terminal no.
Brown	12
Black	13
Red	7
Black	6
Orange	9
Black	8
—	3

[Actuator cable with lock and sensor for step motor (Servo/24 VDC)]

LE – CP – 1 – B

Cable length (L)

1	1.5 m
3	3 m
5	5 m
8	8 m*
A	10 m*
B	15 m*
C	20 m*

∗ Produced upon receipt of order

With lock and sensor

LE-CP-$^{1}_{5}$/Cable length: 1.5 m, 3 m, 5 m

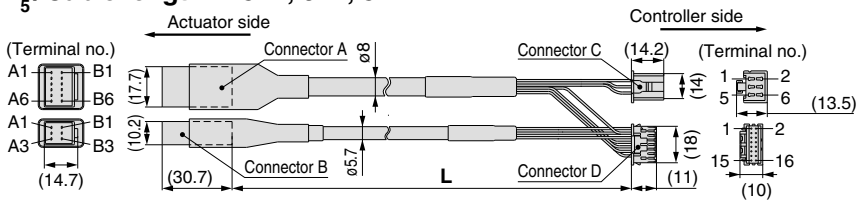

LE-CP-$^{8}_{A}$ $^{B}_{C}$/Cable length: 8 m, 10 m, 15 m, 20 m (∗ Produced upon receipt of order)

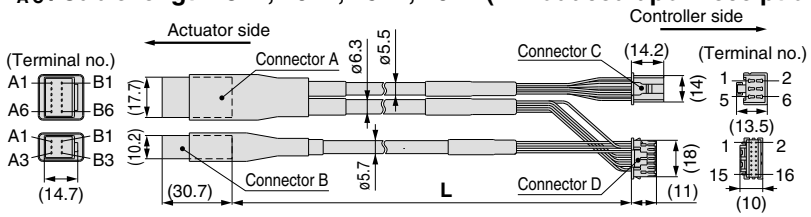

Circuit	Connector A terminal no.	Cable color	Connector C terminal no.
A	B-1	Brown	2
$\overline{A}$	A-1	Red	1
B	B-2	Orange	6
$\overline{B}$	A-2	Yellow	5
COM-A/COM	B-3	Green	3
COM-B/–	A-3	Blue	4
		Shield	
Vcc	B-4	Brown	12
GND	A-4	Black	13
$\overline{A}$	B-5	Red	7
A	A-5	Black	6
$\overline{B}$	B-6	Orange	9
B	A-6	Black	8
		—	3

Cable color	Connector D terminal no.
Brown	12
Black	13
Red	7
Black	6
Orange	9
Black	8
—	3

Circuit	Connector B terminal no.		
Lock (+)	B-1	Red	4
Lock (–)	A-1	Black	5
Sensor (+) Note)	B-3	Brown	1
Sensor (–) Note)	A-3	Blue	2

Note) This is not used for the LEY series.

[Actuator cable for servo motor (24 VDC)]

LE − CA − 1

Cable length (L)

1	1.5 m
3	3 m
5	5 m
8	8 m*
A	10 m*
B	15 m*
C	20 m*

* Produced upon receipt of order

LE-CA-□

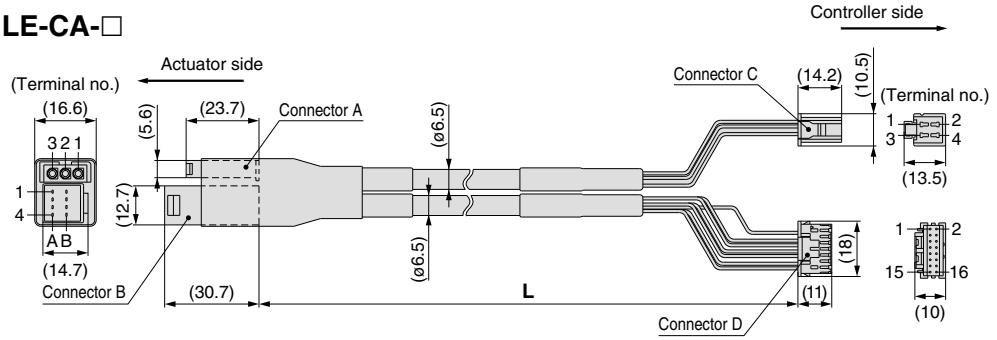

Circuit	Connector A terminal no.	Cable color	Connector C terminal no.
U	1	Red	1
V	2	White	2
W	3	Black	3

Circuit	Connector B terminal no.	Cable color	Connector D terminal no.
Vcc	B-1	Brown	12
GND	A-1	Black	13
$\overline{A}$	B-2	Red	7
A	A-2	Black	6
$\overline{B}$	B-3	Orange	9
B	A-3	Black	8
$\overline{Z}$	B-4	Yellow	11
Z	A-4	Black	10
		—	3

Shield

Connection of shield material

[Actuator cable with lock and sensor for servo motor (24 VDC)]

LE − CA − 1 − B

Cable length (L)

1	1.5 m
3	3 m
5	5 m
8	8 m*
A	10 m*
B	15 m*
C	20 m*

* Produced upon receipt of order

With lock and sensor

LE-CA-□-B

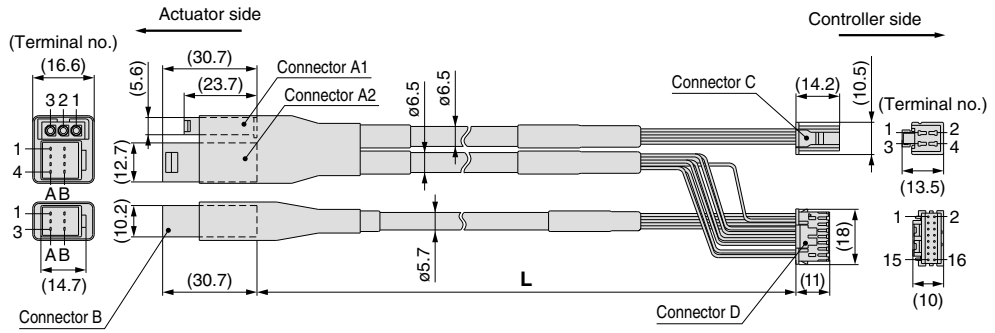

Circuit	Connector A1 terminal no.	Cable color	Connector C terminal no.
U	1	Red	1
V	2	White	2
W	3	Black	3

Circuit	Connector A2 terminal no.	Cable color	Connector D terminal no.
Vcc	B-1	Brown	12
GND	A-1	Black	13
$\overline{A}$	B-2	Red	7
A	A-2	Black	6
$\overline{B}$	B-3	Orange	9
B	A-3	Black	8
$\overline{Z}$	B-4	Yellow	11
Z	A-4	Black	10
		—	3

Shield

Connection of shield material

Circuit	Connector B terminal no.		
Brake (+)	B-1	Red	4
Brake (–)	A-1	Black	5
Sensor (+) Note)	B-3	Brown	1
Sensor (–) Note)	A-3	Black	2

Note) This is not used for the LEY series.

Options

[I/O cable]

LEC − CN5 − 1

Cable length (L)

1	1.5 m
3	3 m
5	5 m

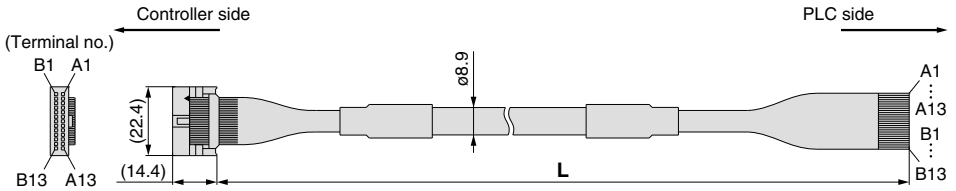

∗ Conductor size: AWG28

Connector pin No.	Cable color	Dot mark	Dot color
A1	Light brown	■	Black
A2	Light brown	■	Red
A3	Yellow	■	Black
A4	Yellow	■	Red
A5	Light green	■	Black
A6	Light green	■	Red
A7	Gray	■	Black
A8	Gray	■	Red
A9	White	■	Black
A10	White	■	Red
A11	Light brown	■ ■	Black
A12	Light brown	■ ■	Red
A13	Yellow	■ ■	Black

Connector pin No.	Cable color	Dot mark	Dot color
B1	Yellow	■ ■	Red
B2	Light green	■ ■	Black
B3	Light green	■ ■	Red
B4	Gray	■ ■	Black
B5	Gray	■ ■	Red
B6	White	■ ■	Black
B7	White	■ ■	Red
B8	Light brown	■ ■ ■	Black
B9	Light brown	■ ■ ■	Red
B10	Yellow	■ ■ ■	Black
B11	Yellow	■ ■ ■	Red
B12	Light green	■ ■ ■	Black
B13	Light green	■ ■ ■	Red
—	Shield		

[Noise filter set for Servo motor (24 VDC)]

LEC − NFA

Contents of the set: 2 noise filters (Produced by WURTH ELEKTRONIK: 74271222)

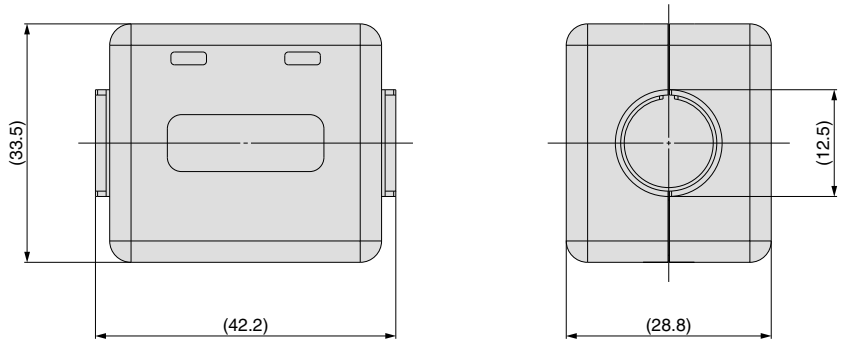

∗ Refer to the LECA6 series Operation Manual for installation.

Series LEC
Controller Setting Software/LEC-W1

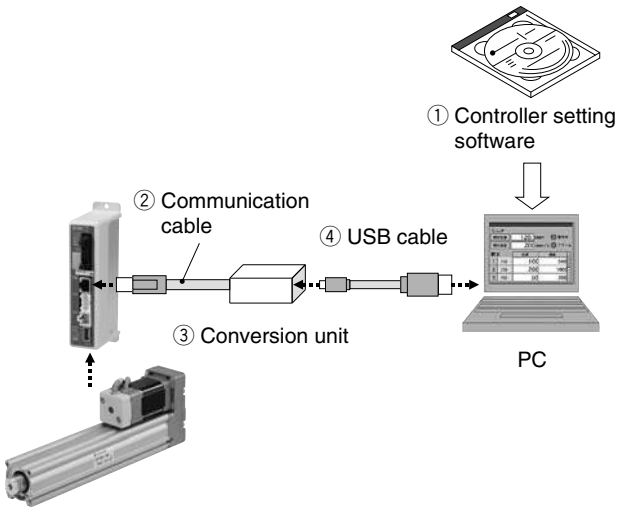

How to Order

LEC – W1

Controller setting software
(Japanese and English are available.)

Contents

① Controller setting software (CD-ROM)
② Communication cable
(Cable between the controller and the conversion unit)
③ Conversion unit
④ USB cable
(Cable between the PC and the conversion unit)

Hardware Requirements

PC/AT compatible machine installed with Windows XP and equipped with USB1.1 or USB2.0 ports.

∗ Windows® and Windows XP® are registered trademarks of Microsoft Corporation.

Screen Example

Easy mode screen example

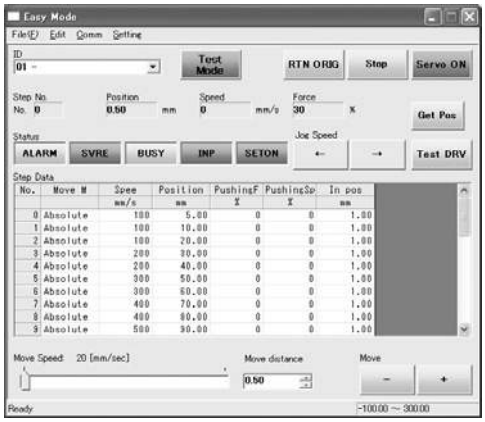

Easy operation and simple setting

- Allowing to set and display actuator step data such as position, speed, force, etc.
- Setting of step data and testing of the drive can be performed on the same page.
- Can be used to jog and move at a constant rate.

Normal mode screen example

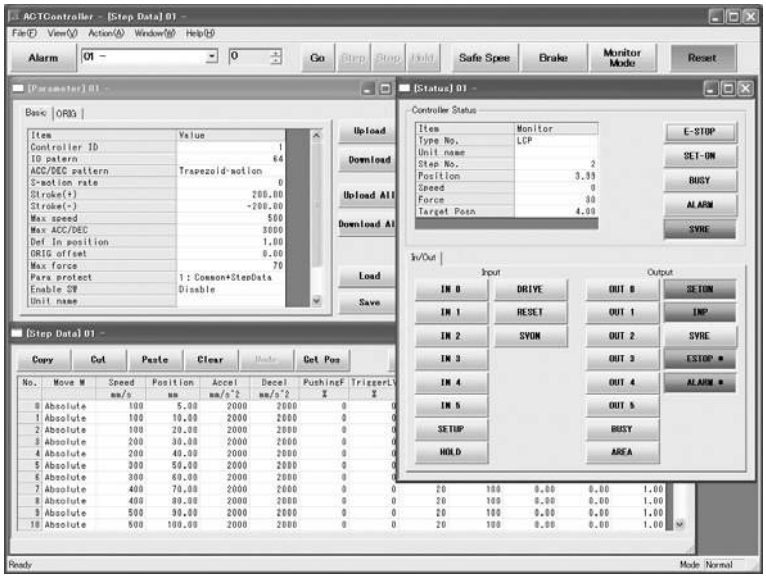

Detail setting

- Step data can be set in detail.
- Signals and terminal status can be monitored.
- Parameters can be set.
- JOG and constant rate movement, return to origin, test operation and testing of compulsory output can be performed.

Series LEC
Teaching Box/LEC-T1

How to Order

LEC – T1 – 3 J G □

Teaching box

Cable length

3	3 m

Initial language

J	Japanese
E	English

Stop switch

G	Equipped with stop switch

Enable switch

Nil	None
S	Equipped with enable switch

∗ Interlock switch for jog test function

Standard functions
- **Chinese character display**
- **Stop switch is provided.**

Option
- **Enable switch is provided.**

Specifications

Item	Description
Switch	Stop switch, Enable switch (Option)
Cable length	3 m
Enclosure	IP64 (Except connector)
Operating temperature range (°F)	41 to 122 (No condensation)
Operating humidity range (%)	35 to 85
Weight (lb)	0.8 (Except cable)

∗ The EMC compliance for the teaching box was tested with LECP6 controller and applicable actuator only.

Easy Mode

Function	Description
Step data	• Setting of step data
Jog	• Jog operation • Return to origin
Test	• 1 step operation • Return to origin
Monitor	• Display of axis and step data No. • Display of two items selected from Position, Speed, Force.
Alarm	• Display of active alarm • Alarm reset
TB setting	• Reconnection of axis • Setting of easy/normal mode • Setting of step data and selection of item for monitoring function

Menu Operations Flowchart

Menu
- Data
- Monitor
- Jog
- Test
- Alarm
- TB setting

Data
Step data No.
Setting of two items selected below
(Position, Speed, Force, Acceleration, Deceleration)

Monitor
Display of step No.
Display of two items selected below
(Position, Speed, Force)

Jog
Return to origin
Jog operation

Test
1 step operation

Alarm
Display of active alarm
Alarm reset

TB setting
Reconnect
Easy/Normal
Set item

Normal Mode

Function	Description
Step data	• Step data setting
Parameter	• Parameters setting
Test	• Jog operation/Constant rate movement • Return to origin • Test drive (Specify a maximum of 5 step data and operate.) • Compulsory output (Compulsory signal output, Compulsory terminal output)
Monitor	• Drive monitor • Output signal monitor • Input signal monitor • Output terminal monitor • Input terminal monitor
Alarm	• Active alarm display (Alarm reset) • Alarm log record display
File	• Data saving Save the step data and parameters of the controller which is being used for communication (it is possible to save four files, with one set of step data and parameters defined as one file). • Load to controller Loads the data which is saved in the teaching box to the controller which is being used for communication. • Delete the saved data.
TB setting	• Display setting (Easy/Normal mode) • Language setting (Japanese/English) • Backlight setting • LCD contrast setting • Beep sound setting • Max. connection axis • Distance unit (mm/inch)
Reconnect	• Reconnection of axis

Menu Operations Flowchart

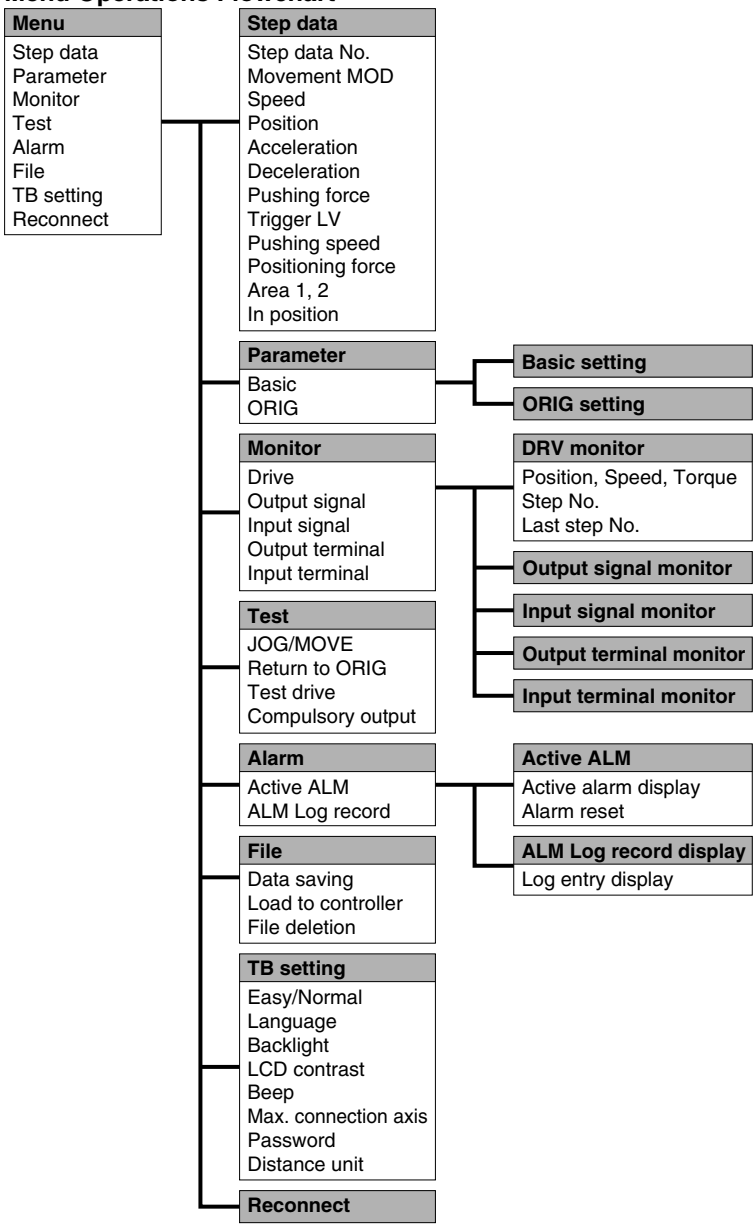

Dimensions

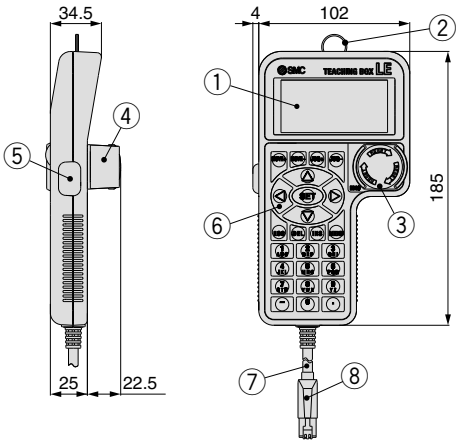

No.	Description	Function
1	**LCD**	A screen of liquid crystal display (with backlight)
2	**Ring**	A ring for hanging the teaching box
3	**Stop switch**	Locks and stops operation when this switch is pressed. The lock is released when it is turned to the right.
4	**Stop switch guard**	A guard for the stop switch
5	**Enable switch (Option)**	Prevents unintentional operation (unexpected operation) of the jog test function. Other functions such as data change are not covered.
6	**Key switch**	Switch for each input
7	**Cable**	Length: 3 meters
8	**Connector**	A connector connected to CN4 of the controller

Series LEC
Controller and Peripheral Devices/ Specific Product Precautions 1

Be sure to read before handling. Refer to page 32 for Safety Instructions.
Refer to the operation manual for using the products.
Please download it via our website. http://www.smcworld.com/

Design/Selection

⚠Warning

1. **Be sure to apply the specified voltage.**
   Otherwise, malfunction and breakage may be caused. If the applied voltage is lower than the specified, it is possible that the load cannot be moved due to an internal voltage drop of the controller. Please check the operating voltage before use.
2. **Do not operate the product beyond the specifications.**
   Otherwise, a fire, malfunction or actuator damage can result. Please check the specifications before use.
3. **Install an emergency stop circuit outside of the enclosure.**
   Please install an emergency stop outside of the enclosure so that it can stop the system operation immediately and intercept the power supply.
4. **In order to prevent damage due to the breakdown and the malfunction of the controller and its peripheral devices, a backup system should be established previously by giving a multiple-layered structure or a fail-safe design to the equipment, etc.**
5. **If a danger against the personnel is expected due to an abnormal heat generation, smoking, ignition, etc., of the controller and its peripheral devices, cut off the power supply for the product and the system immediately.**

Handling

⚠Warning

1. **Do not touch the inside of the controller and its peripheral devices.**
   It may cause an electric shock or damage to the controller.
2. **Do not perform the operation or setting of the product with wet hands.**
   It may cause an electric shock.
3. **Product with damage or the one lacking of any components should not be used.**
   It may cause an electric shock, fire, or injury.
4. **Use only the specified combination between the electric actuator and controller.**
   It may cause damage to the actuator or the controller.
5. **Be careful not to be caught or hit by the workpiece while the actuator is moving.**
   It may cause an injury.
6. **Do not connect the power supply or power on the product before confirming the area to which the workpiece moves is safe.**
   The movement of the workpiece may cause an accident.
7. **Do not touch the product when it is energized and for some time after power has been disconnected, as it is very hot.**
   It may lead to a burn due to the high temperature.
8. **Check the voltage using a tester for more than 5 minutes after power-off in case of installation, wiring and maintenance.**
   It may cause an electric shock, fire, or injury.

Handling

⚠Warning

9. **Static electricity may cause malfunction or break the controller. Do not touch the controller while power is supplied.**
   When touching the controller for maintenance, take sufficient measures to eliminate static electricity.
10. **Do not use the product in an area where dust, powder dust, water, chemicals or oil is in the air.**
    It will cause failure or malfunction.
11. **Do not use the product in an area where a magnetic field is generated.**
    It will cause failure or malfunction.
12. **Do not install the product in the environment of flammable gas, explosive gas and corrosive gas.**
    It could lead to fire, explosion and corrosion.
13. **Radiant heat from strong heat supplies such as a furnace, direct sunlight, etc., should not be applied to the product.**
    It will cause failure of the controller or its peripheral devices.
14. **Do not use the product in an environment subject to a temperature cycle.**
    It will cause failure of the controller or its peripheral devices.
15. **Do not use the product in a place where surges are generated.**
    When there are units that generate a large amount of surge around the product (e.g., solenoid type lifters, high frequency induction furnaces, motors, etc.), this may cause deterioration or damage to the product's internal circuit. Avoid supplies of surge generation and crossed lines.
16. **Do not install the product in an environment under the effect of vibrations and impacts.**
    It will cause failure or malfunction.
17. **When a surge generating load such as a relay or solenoid valve is directly driven, use a product that incorporates a surge absorption element.**

Installation

⚠Warning

1. **Install the controller and its peripheral devices on a fire-proof material.**
   A direct installation on or near a flammable material may cause fire.
2. **Do not install the product in a place subject to vibrations and impacts.**
   It will cause failure or malfunction.
3. **Do not mount the controller and its peripheral devices together with a large-sized electromagnetic contactor or no-fuse breaker, which generates vibration, on the same panel. Mount them on different panels, or keep the controller and its peripheral devices away from such a vibration supply.**
4. **Install the controller and its peripheral devices on a flat surface.**
   If the mounting surface is distorted or not flat, an unacceptable force may be added to the housing, etc., to cause troubles.

Controller and Peripheral Devices/ Specific Product Precautions 2

Be sure to read before handling. Refer to page 32 for Safety Instructions.
Refer to the operation manual for using the products.
Please download it via our website. http://www.smcworld.com/

Power Supply

⚠Caution

1. **Use a power supply that has low noise between lines and between power and ground.**
   In cases where noise is high, an isolation transformer should be used.
2. **The power supplies should be separated between the controller power and the I/O signal power and both of them do not use the power supply of "inrush current prevention type".**
   If the power supply is "inrush current prevention type", a voltage drop may be caused during the acceleration of the actuator.
3. **To prevent surges from lightning, an appropriate measure should be taken. Ground the surge absorber for lightning separately from the grounding of the controller and its peripheral devices.**

Grounding

⚠Warning

1. **Be sure to carry out grounding in order to ensure the noise tolerance.**
2. **Dedicated grounding should be used.**
   Grounding should be to a D-class ground. (Ground resistance of 100 Ω or less)
3. **Grounding should be performed near the controller and its peripheral devices to shorten the grounding distance.**
4. **In the unlikely event that malfunction is caused by ground, please disconnect the unit from ground.**

Maintenance

⚠Warning

1. **Perform a maintenance check periodically.**
   Confirm wiring and screws are not loose.
   Loose screws or wires may cause unintentional malfunction.
2. **Conduct an appropriate functional inspection after completing the maintenance.**
   At times where the equipment or machinery does not operate properly, conduct an emergency stop of the system. Otherwise, an unexpected malfunction may occur and it will become impossible to secure the safety. Conduct a test of the emergency stop in order to confirm the safety of the equipment.
3. **Do not disassemble, modify or repair the controller and its peripheral devices.**
4. **Do not put anything conductive or flammable inside of the controller.**
   It may cause a fire.
5. **Do not conduct an insulation resistance test and withstand voltage test on this product.**
6. **Ensure sufficient space for maintenance activities.**
   Design the system that allows required space for maintenance.

⚠ Safety Instructions

These safety instructions are intended to prevent hazardous situations and/or equipment damage. These instructions indicate the level of potential hazard with the labels of **"Caution," "Warning"** or **"Danger."** They are all important notes for safety and must be followed in addition to International Standards (ISO/IEC), American National Standards Institute (ANSI)*1) and other safety regulations.

⚠ Caution: **Caution** indicates a hazard with a low level of risk which, if not avoided, could result in minor or moderate injury.

⚠ Warning: **Warning** indicates a hazard with a medium level of risk which, if not avoided, could result in death or serious injury.

⚠ Danger : **Danger** indicates a hazard with a high level of risk which, if not avoided, will result in death or serious injury.

*1) ISO 4414: Pneumatic fluid power – General rules relating to systems.
ISO 4413: Hydraulic fluid power – General rules relating to systems.
IEC 60204-1: Safety of machinery – Electrical equipment of machines. (Part 1: General requirements)
ISO 10218-1: Manipulating industrial robots - Safety.
ANSI / (NFPA) T2.25.1 R2: Pneumatic fluid power - Systems standard for industrial machinery.
NFPA (Fluid) T2.24.1 R1: Hydraulic fluid power - Systems standard for stationary industrial machinery.
NFPA 79: Electrical Standard for Industrial Machinery.
ANSI / RIA / ISO 10218 -1: Robots for Industrial Environment - Safety Requirements - Part 1 - Robot.
etc.

⚠Warning

1. The compatibility of the product is the responsibility of the person who designs the equipment or decides its specifications.

Since the product specified here is used under various operating conditions, its compatibility with specific equipment must be decided by the person who designs the equipment or decides its specifications based on necessary analysis and test results. The expected performance and safety assurance of the equipment will be the responsibility of the person who has determined its compatibility with the product. This person should also continuously review all specifications of the product referring to its latest catalog information, with a view to giving due consideration to any possibility of equipment failure when configuring the equipment.

2. Only personnel with appropriate training should operate machinery and equipment.

The product specified here may become unsafe if handled incorrectly. The assembly, operation and maintenance of machines or equipment including our products must be performed by an operator who is appropriately trained and experienced.

3. Do not service or attempt to remove product and machinery/equipment until safety is confirmed.

1. The inspection and maintenance of machinery/equipment should only be performed after measures to prevent falling or runaway of the driven objects have been confirmed.
2. When the product is to be removed, confirm that the safety measures as mentioned above are implemented and the power from any appropriate source is cut, and read and understand the specific product precautions of all relevant products carefully.
3. Before machinery/equipment is restarted, take measures to prevent unexpected operation and malfunction.

4. Contact SMC beforehand and take special consideration of safety measures if the product is to be used in any of the following conditions.

1. Conditions and environments outside of the given specifications, or use outdoors or in a place exposed to direct sunlight.
2. Installation on equipment in conjunction with atomic energy, railways, air navigation, space, shipping, vehicles, military, medical treatment, combustion and recreation, or equipment in contact with food and beverages, emergency stop circuits, clutch and brake circuits in press applications, safety equipment or other applications unsuitable for the standard specifications described in the product catalog.
3. An application which could have negative effects on people, property, or animals requiring special safety analysis.
4. Use in an interlock circuit, which requires the provision of double interlock for possible failure by using a mechanical protective function, and periodical checks to confirm proper operation.

⚠Caution

1. The product is provided for use in manufacturing industries.

The product herein described is basically provided for peaceful use in manufacturing industries.
If considering using the product in other industries, consult SMC beforehand and exchange specifications or a contract if necessary.
If anything is unclear, contact your nearest sales branch.

Limited warranty and Disclaimer/ Compliance Requirements

The product used is subject to the following "Limited warranty and Disclaimer" and "Compliance Requirements". Read and accept them before using the product.

Limited warranty and Disclaimer

1. The warranty period of the product is 1 year in service or 1.5 years after the product is delivered.*2)
   Also, the product may have specified durability, running distance or replacement parts. Please consult your nearest sales branch.
2. For any failure or damage reported within the warranty period which is clearly our responsibility, a replacement product or necessary parts will be provided.
   This limited warranty applies only to our product independently, and not to any other damage incurred due to the failure of the product.
3. Prior to using SMC products, please read and understand the warranty terms and disclaimers noted in the specified catalog for the particular products.

*2) **Vacuum pads are excluded from this 1 year warranty.**
A vacuum pad is a consumable part, so it is warranted for a year after it is delivered.
Also, even within the warranty period, the wear of a product due to the use of the vacuum pad or failure due to the deterioration of rubber material are not covered by the limited warranty.

Compliance Requirements

1. The use of SMC products with production equipment for the manufacture of weapons of mass destruction (WMD) or any other weapon is strictly prohibited.
2. The exports of SMC products or technology from one country to another are governed by the relevant security laws and regulations of the countries involved in the transaction. Prior to the shipment of a SMC product to another country, assure that all local rules governing that export are known and followed.

⚠ Safety Instructions	Be sure to read "Handling Precautions for SMC Products" (M-E03-3) before using.

Step Motor Controller
(Servo/24 VDC)

Series LECP6

Servo Motor Controller
(24 VDC)

Series LECA6

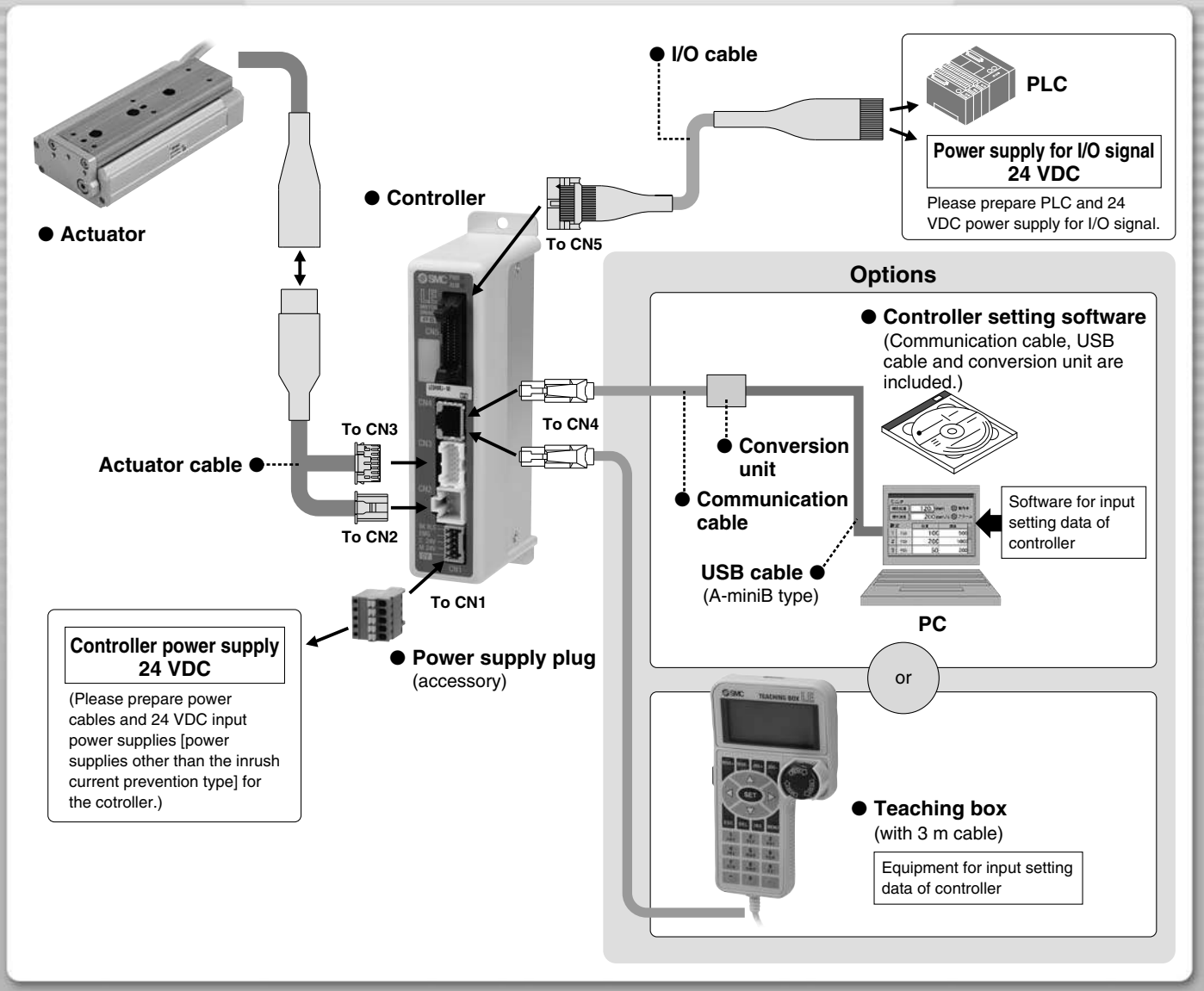

Step Motor Controller (Servo/24 VDC)
Series LECP6
Servo Motor Controller (24 VDC)
Series LECA6

Series LECP6 *Series LECA6*

How to Order

⚠Caution

Note 1) CE-compliant products

① EMC compliance was tested by combining the electric actuator LES series and the controller LEC series. The EMC depends on the configuration of the customer's control panel and the relationship with other electrical equipment and wiring. Therefore conformity to the EMC directive cannot be certified for SMC components incorporated into the customer's equipment under actual operating conditions. As a result it is necessary for the customer to verify conformity to the EMC directive for the machinery and equipment as a whole.

② For the LECA6 series (servo motor controller), EMC compliance was tested by installing a noise filter set (LEC-NFA). Refer to page 30 for the noise filter set. Refer to the LECA Operation Manual for installation.

LE C P 6 N □ □ – □

Actuator

Controller

Compatible motor

P	Step motor (Servo/24 VDC)
A	Servo motor (24 VDC) Note 1)

Number of step data

6	64 points

Parallel I/O type

N	NPN
P	PNP

I/O cable length

Nil	Without cable
1	1.5 m
3	3 m
5	5 m

Actuator part number

(Except cable specifications and actuator options)
Example: Enter [LESH8RJ-50] for LESH8RJ-50-R16N1

Option

Nil	Screw mounting
D Note 2)	DIN rail mounting

Note 2) DIN rail is not included. Order it separately.

∗ When controller equipped type (-P6□□) is selected when ordering the LE series, you do not need to order this controller.

The controller is sold as single unit after the compatible actuator is set.

Confirm that the combination of the controller and the actuator is compatible.

<Be sure to check the following before use.>

① Check that actuator label for model number. This matches the controller.

② Check Parallel I/O configuration matches (NPN or PNP).

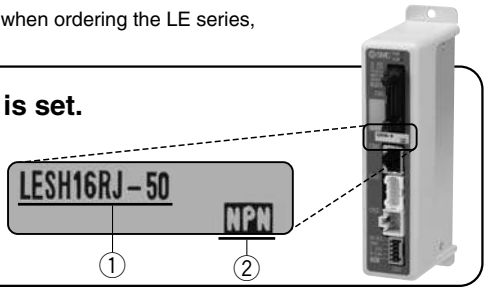

Specifications

Basic Specifications

Item	LECP6	LECA6
Compatible motor	Unipolar connection type 2-phase HB step motor	AC servo motor
Power supply Note 1)	Power voltage: 24 VDC ±10% Current consumption: 3 A (Peak 5 A) Note 2) [Including motor drive power, control power, stop, lock release]	Power voltage: 24 VDC ±10% Current consumption: 3 A (Peak 10 A) Note 2) [Including motor drive power, control power, stop, lock release]
Parallel input	11 inputs (Photo-coupler isolation)	
Parallel output	13 outputs (Photo-coupler isolation)	
Compatible encoder	A/B phase, Line receiver input Resolution 800 p/r	A/B/Z phase, Line receiver input Resolution 800 p/r
Serial communication	RS485 (Modbus protocol compliant)	
Memory	EEPROM	
LED indicator	LED (Green/Red) one of each	
Lock control	Forced-lock release terminal	
Cable length (m)	I/O cable: 5 or less Actuator cable: 20 or less	
Cooling system	Natural air cooling	
Operating temperature range (°C)	0 to 40 (No condensation and freezing)	
Operating humidity range (%)	35 to 85 (No condensation and freezing)	
Storage temperature range (°C)	–10 to 60 (No condensation and freezing)	
Storage humidity range (%)	35 to 85 (No condensation and freezing)	
Insulation resistance (MΩ)	Between the housing (radiation fin) and SG terminal 50 (500 VDC)	
Weight (g)	150 (Screw mounting) 170 (DIN rail mounting)	

Note 1) Do not use the power supply of "inrush current prevention type" for the controller power supply.

Note 2) The power consumption changes depending on the actuator model. Refer to the specifications of actuator for more details.

How to Mount

a) Screw mounting (LEC□6□□-□)
(Installation with two M4 screws)

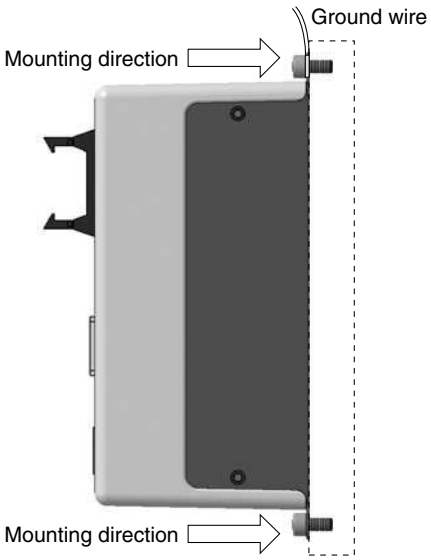

b) DIN rail mounting (LEC□6□□D-□)
(Installation with the DIN rail)

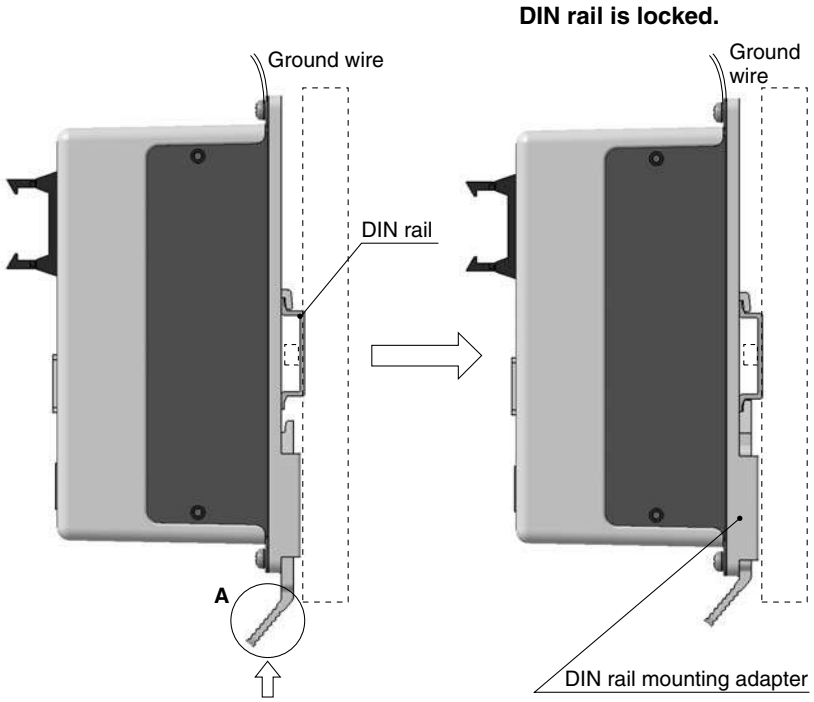

Hook the controller on the DIN rail and press the lever of section **A** in the arrow direction to lock it.

DIN rail
AXT100-DR-□

∗ For □, enter a number from the "No." line in the below table.
Refer to the dimensions on page 24 for the mounting dimensions.

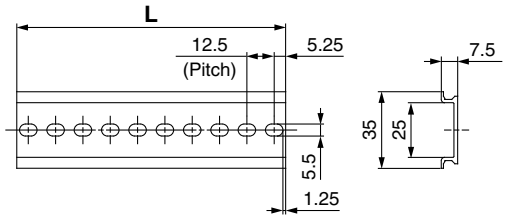

L Dimensions

No.	1	2	3	4	5	6	7	8	9	10	11	12	13	14	15	16	17	18	19	20
L dimension	23	35.5	48	60.5	73	85.5	98	110.5	123	135.5	148	160.5	173	185.5	198	210.5	223	235.5	248	260.5

No.	21	22	23	24	25	26	27	28	29	30	31	32	33	34	35	36	37	38	39	40
L dimension	273	285.5	298	310.5	323	335.5	348	360.5	373	385.5	398	410.5	423	435.5	448	460.5	473	485.5	498	510.5

DIN rail mounting adapter
LEC-D0 (with 2 mounting screws)

This should be used when the DIN rail mounting adapter is mounted onto the screw mounting type controller afterwards.

Dimensions

a) Screw mounting (LEC□6□□-□)

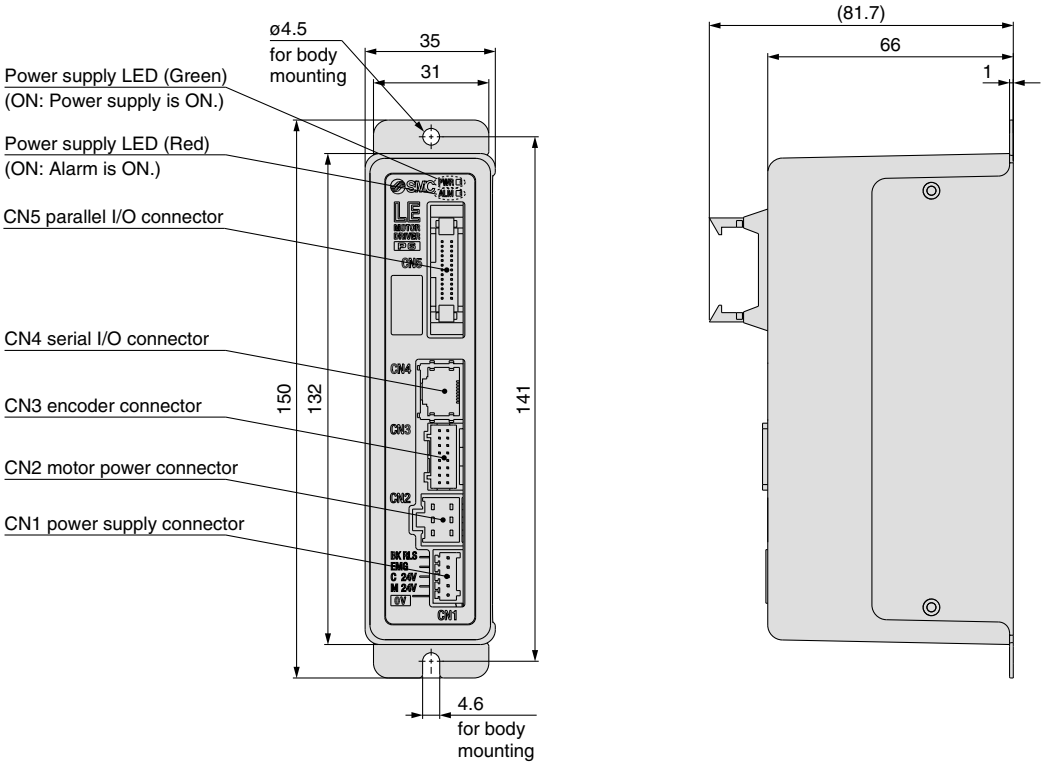

b) DIN rail mounting (LEC□6□□D-□)

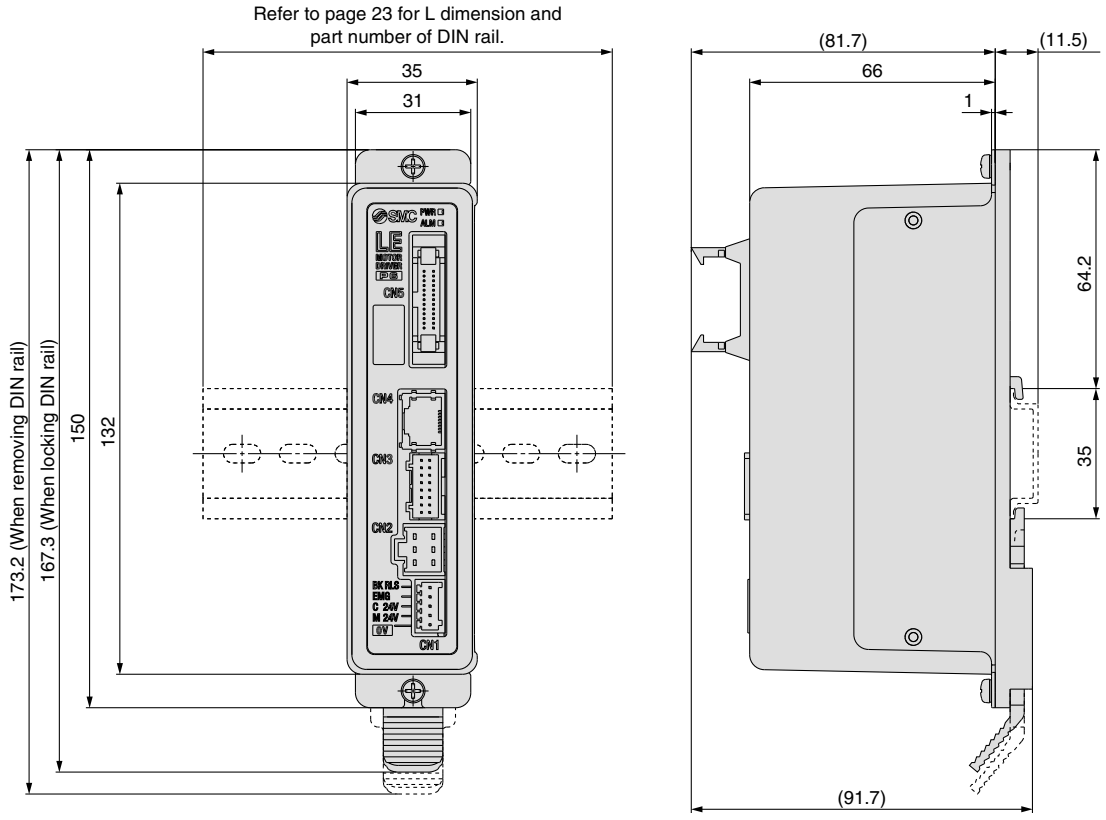

Note) When two or more controllers are used, keep the interval between them 10 mm or more (when the LESH25 is used).

Wiring Example 1

Power Supply Connector: CN1

∗ Power supply plug is an accessory.

Power supply plug for LECP6

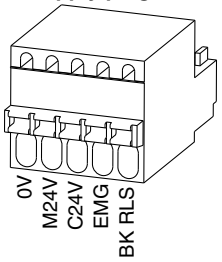

CN1 Power Supply Connector Terminal for LECP6

Terminal name	Function	Function details
0V	Common supply (–)	M24V terminal/C24V terminal/EMG terminal/BK RLS terminal are common (–).
M24V	Motor power supply (+)	This is the motor power supply (+) that is supplied to the controller.
C24V	Control power supply (+)	This is the control power supply (+) that is supplied to the controller.
EMG	Stop (+)	This is the input (+) that releases the stop.
BK RLS	Lock release (+)	This is the input (+) that releases the lock.

Power supply plug for LECA6

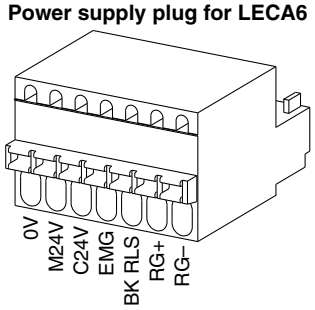

CN1 Power Supply Connector Terminal for LECA6

Terminal name	Function	Function details
0V	Common supply (–)	M24V terminal/C24V terminal/EMG terminal/BK RLS terminal are common (–).
M24V	Motor power supply (+)	This is the motor power supply (+) that is supplied to the controller.
C24V	Control power supply (+)	This is the control power supply (+) that is supplied to the controller.
EMG	Stop (+)	This is the input (+) that releases the stop.
BK RLS	Lock release (+)	This is the input (+) that releases the lock.
RG+	Regenerative output 1	These are the regenerative output terminals for external connection. (It is not necessary to connect them in the combination with standard specification LES series.)
RG–	Regenerative output 2	

Wiring Example 2

Parallel I/O Connector: CN5

∗ When you connect a PLC, etc., to the CN5 parallel I/O connector, please use the I/O cable (LEC-CN5-□).
∗ The wiring should be changed depending on the type of the parallel I/O (NPN or PNP). Please wire referring to the following diagram.

Wiring diagram

LEC□6N□□-□ (NPN)

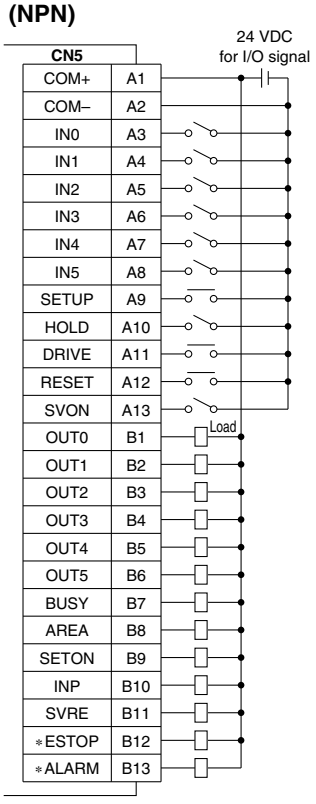

LEC□6P□□-□ (PNP)

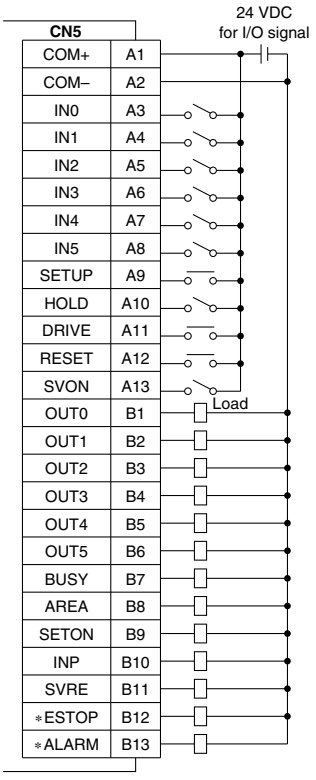

Input Signal

Name	Contents
COM+	Connects the power supply 24 V for input/output signal
COM–	Connects the power supply 0 V for input/output signal
IN0 to IN5	Step data specified Bit No. (Input is instructed in the combination of IN0 to 5.)
SETUP	Instruction to return to the original position
HOLD	Operation is temporarily stopped.
DRIVE	Instruction to drive
RESET	Alarm reset and operation interruption
SVON	Servo ON instruction

Output Signal

Name	Contents
OUT0 to OUT5	Outputs the step data No. during operation
BUSY	Outputs when the actuator is moving
AREA	Outputs within the step data area output setting range
SETON	Outputs when returning to the original position
INP	Outputs when target position or target force is reached (Turns on when the positioning or pushing is completed.)
SVRE	Outputs when servo is on
∗ESTOP Note)	Not output when EMG stop is instructed
∗ALARM Note)	Not output when alarm is generated

Note) These signals are output when the power supply of the controller is ON. (N.C.)

Step Data Setting

1. Step data setting for positioning

In this setting, the actuator moves toward and stops at the target position. The following diagram shows the setting items and operation. The setting items and set values for this operation are stated below.

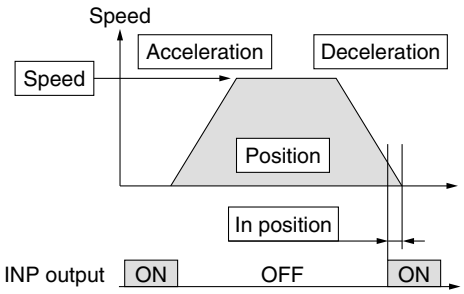

◎: Need to be set.
○: Need to be adjusted as required.
—: Setting is not required.

Step Data (Positioning)

Necessity	Item	Description
◎	Movement MOD	When the absolute position is required, set Absolute. When the relative position is required, set Relative.
◎	Speed	Transfer speed to the target position
◎	Position	Target position
○	Acceleration	Parameter which defines how rapidly the actuator reaches the speed set. The higher the set value, the faster it reaches the speed set.
○	Deceleration	Parameter which defines how rapidly the actuator comes to stop. The higher the set value, the quicker it stops.
◎	Pushing force	Set 0. (If values 1 to 100 are set, the operation will be changed to the pushing operation.)
—	Trigger LV	Setting is not required.
—	Pushing speed	Setting is not required.
○	Positioning force	Max. torque during the positioning operation (No specific change is required.)
○	Area 1, Area 2	Condition that turns on the AREA output signal.
○	In position	Condition that turns on the INP output signal. When the actuator enters the range of [in position], the INP output signal turns on. (It is unnecessary to change this from the initial value.) When it is necessary to output the arrival signal before the operation is completed, make the value larger.

2. Step data setting for pushing

The actuator moves toward the pushing start position, and when it reaches that position, it starts pushing with less than the set force. The following diagram shows the setting items and operation. The setting items and set values for this operation are stated below.

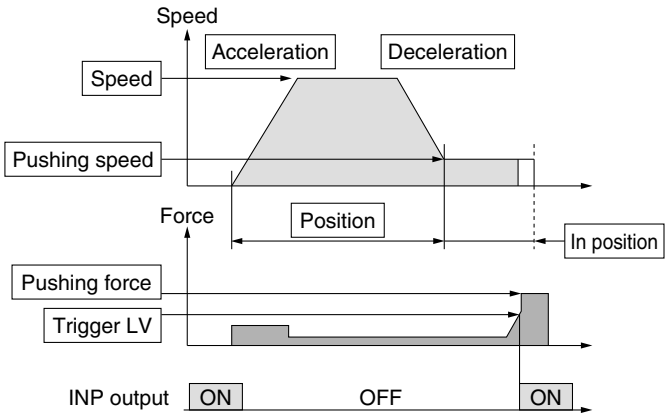

◎: Need to be set.
○: Need to be adjusted as required.

Step Data (Pushing)

Necessity	Item	Description
◎	Movement MOD	When the absolute position is required, set Absolute. When the relative position is required, set Relative.
◎	Speed	Transfer speed to the pushing start position
◎	Position	Pushing start position
○	Acceleration	Parameter which defines how rapidly the actuator reaches the speed set. The higher the set value, the faster it reaches the speed set.
○	Deceleration	Parameter which defines how rapidly the actuator comes to stop. The higher the set value, the quicker it stops.
◎	Pushing force	Pushing force ratio is defined. The setting range differs depending on the electric actuator type. Refer to the operation manual for the electric actuator.
◎	Trigger LV	Condition that turns on the INP output signal. The INP output signal is turned on when the generated force exceeds the value. Threshold level should be less than the pushing force.
○	Pushing speed	Pushing speed When the speed is set fast, the electric actuator and work pieces might be damaged due to the impact when they hit the end, so this set value should be smaller. Refer to the operation manual of the electric actuator.
○	Positioning force	Max. torque during the positioning operation (No specific change is required.)
○	Area 1, Area 2	Condition that turns on the AREA output signal.
◎	In position	Transfer distance during pushing. If the transferred distance exceeds the setting, it stops even if it is not pushing. If the transfer distance is exceeded, the INP output signal will not be turned on.

Signal Timing

Return to Origin

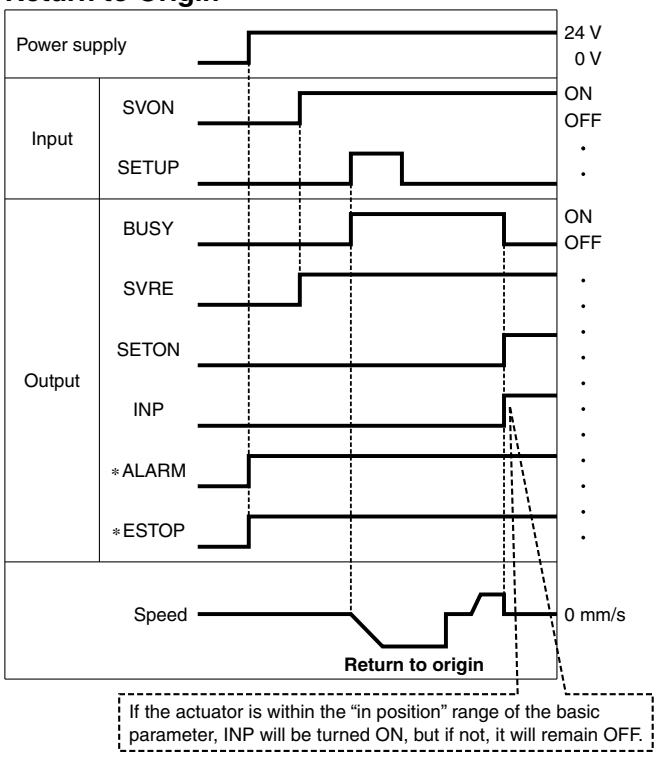

∗ “∗ALARM” and “∗ESTOP” are expressed as negative-logic circuit.

Positioning Operation

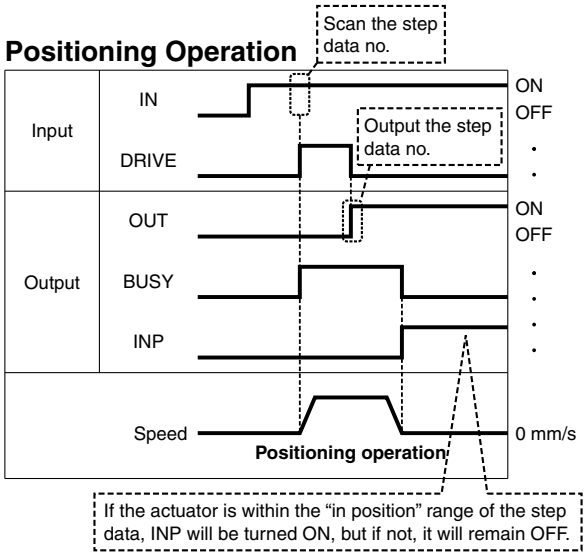

Pushing Operation

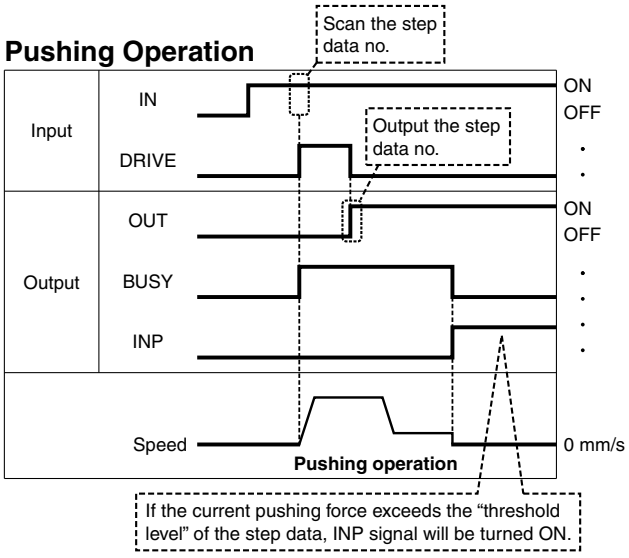

∗ “OUT” is output when “DRIVE” is changed from ON to OFF. (When power supply is applied, “DRIVE” or “RESET” is turned ON or “∗ESTOP” is turned OFF, all of the “OUT” outputs are turned OFF.)

HOLD

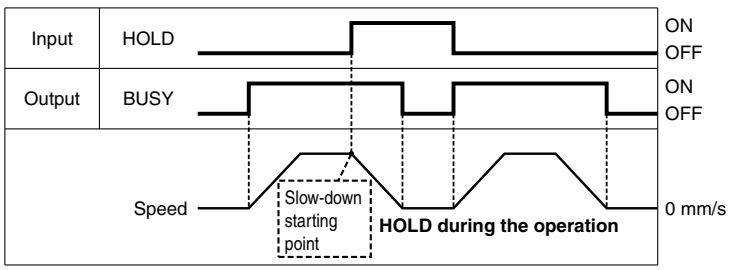

∗ When the actuator is in the positioning range in the pushing operation, it does not stop even if HOLD signal is input.

Reset

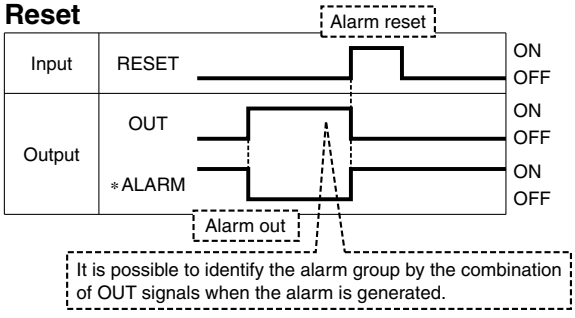

∗ “∗ALARM” and “∗ESTOP” are expressed as negative-logic circuit.

Options

[Actuator cable for step motor (Servo/24 VDC)]

LE – CP – 1

Cable length (L)

1	1.5 m
3	3 m
5	5 m
8	8 m*
A	10 m*
B	15 m*
C	20 m*

* Produced upon receipt of order

LE-CP-$\frac{1}{3}$/Cable length: 1.5 m, 3 m, 5 m

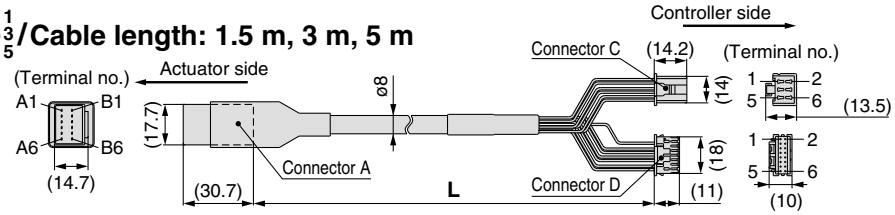

LE-CP-$\frac{8}{A}\frac{B}{C}$/Cable length: 8 m, 10 m, 15 m, 20 m (* Produced upon receipt of order)

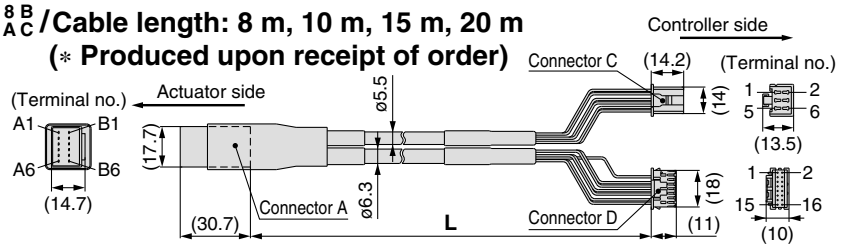

Circuit	Connector A terminal no.
A	B-1
$\overline{A}$	A-1
B	B-2
$\overline{B}$	A-2
COM-A/COM	B-3
COM-B/–	A-3
Vcc	B-4
GND	A-4
$\overline{A}$	B-5
A	A-5
$\overline{B}$	B-6
B	A-6

Shield

Cable color	Connector C terminal no.
Brown	2
Red	1
Orange	6
Yellow	5
Green	3
Blue	4

Cable color	Connector D terminal no.
Brown	12
Black	13
Red	7
Black	6
Orange	9
Black	8
—	3

[Actuator cable with lock and sensor for step motor (Servo/24 VDC)]

LE – CP – 1 – B

Cable length (L)

1	1.5 m
3	3 m
5	5 m
8	8 m*
A	10 m*
B	15 m*
C	20 m*

* Produced upon receipt of order

With lock and sensor

LE-CP-$\frac{1}{3}$/Cable length: 1.5 m, 3 m, 5 m

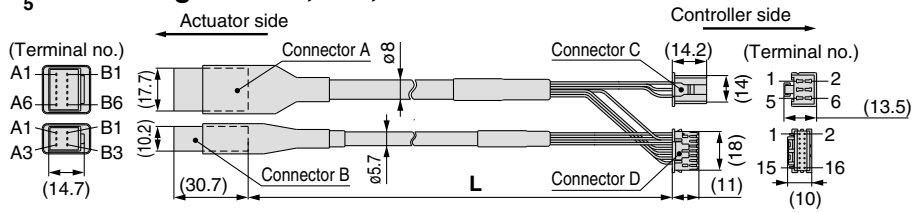

LE-CP-$\frac{8}{A}\frac{B}{C}$/Cable length: 8 m, 10 m, 15 m, 20 m (* Produced upon receipt of order)

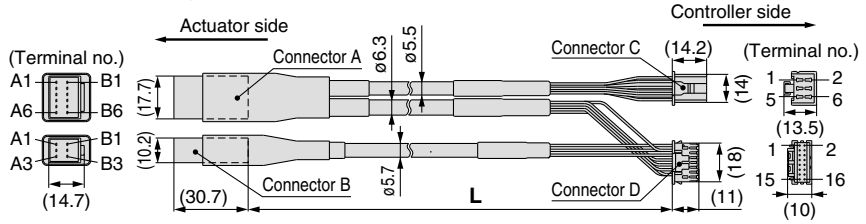

Circuit	Connector A terminal no.
A	B-1
$\overline{A}$	A-1
B	B-2
$\overline{B}$	A-2
COM-A/COM	B-3
COM-B/–	A-3
Vcc	B-4
GND	A-4
$\overline{A}$	B-5
A	A-5
$\overline{B}$	B-6
B	A-6

Shield

Cable color	Connector C terminal no.
Brown	2
Red	1
Orange	6
Yellow	5
Green	3
Blue	4

Cable color	Connector D terminal no.
Brown	12
Black	13
Red	7
Black	6
Orange	9
Black	8
—	3

Circuit	Connector B terminal no.
Lock (+)	B-1
Lock (–)	A-1
Sensor (+) Note)	B-3
Sensor (+) Note)	A-3

Red	4
Black	5
Brown	1
Blue	2

Note) This is not used for the LES series.

[Actuator cable for servo motor (24 VDC)]

LE − CA − 1

Cable length (L)

1	1.5 m
3	3 m
5	5 m
8	8 m*
A	10 m*
B	15 m*
C	20 m*

* Produced upon receipt of order

LE-CA-□

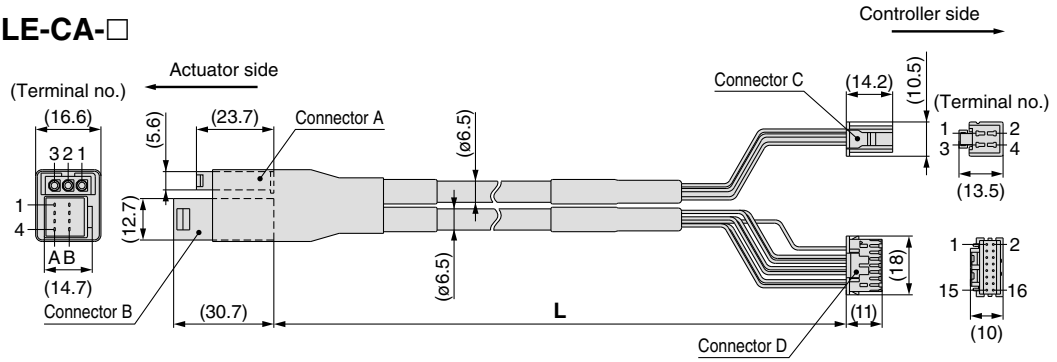

Circuit	Connector A terminal no.
U	1
V	2
W	3

Cable color	Connector C terminal no.
Red	1
White	2
Black	3

Circuit	Connector B terminal no.
Vcc	B-1
GND	A-1
$\overline{A}$	B-2
A	A-2
$\overline{B}$	B-3
B	A-3
$\overline{Z}$	B-4
Z	A-4

Shield

Cable color	Connector D terminal no.
Brown	12
Black	13
Red	7
Black	6
Orange	9
Black	8
Yellow	11
Black	10
—	3

Connection of shield material

[Actuator cable with lock and sensor for servo motor (24 VDC)]

LE − CA − 1 − B

Cable length (L)

1	1.5 m
3	3 m
5	5 m
8	8 m*
A	10 m*
B	15 m*
C	20 m*

* Produced upon receipt of order

With lock and sensor

LE-CA-□-B

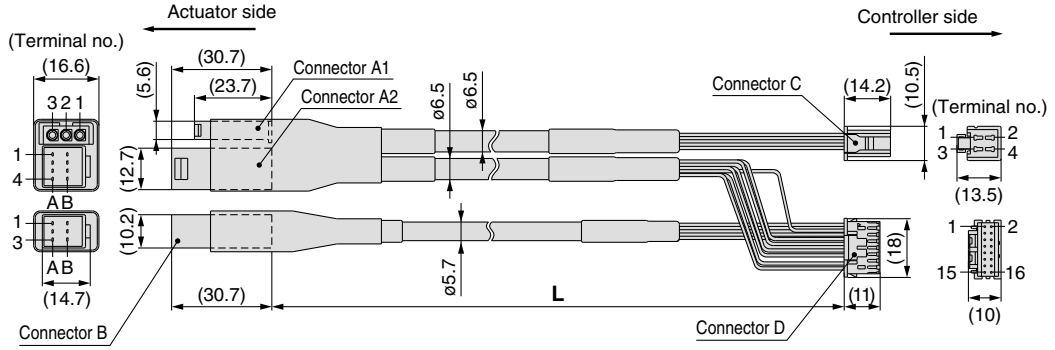

Circuit	Connector A1 terminal no.
U	1
V	2
W	3

Cable color	Connector C terminal no.
Red	1
White	2
Black	3

Circuit	Connector A2 terminal no.
Vcc	B-1
GND	A-1
$\overline{A}$	B-2
A	A-2
$\overline{B}$	B-3
B	A-3
$\overline{Z}$	B-4
Z	A-4

Shield

Cable color	Connector D terminal no.
Brown	12
Black	13
Red	7
Black	6
Orange	9
Black	8
Yellow	11
Black	10
—	3

Connection of shield material

Circuit	Connector B terminal no.
Brake (+)	B-1
Brake (–)	A-1
Sensor (+) Note)	B-3
Sensor (–) Note)	A-3

Red	4
Black	5
Brown	1
Black	2

Note) This is not used for the LES series.

Options

[I/O cable]

LEC − CN5 − 1

Cable length (L)

1	1.5 m
3	3 m
5	5 m

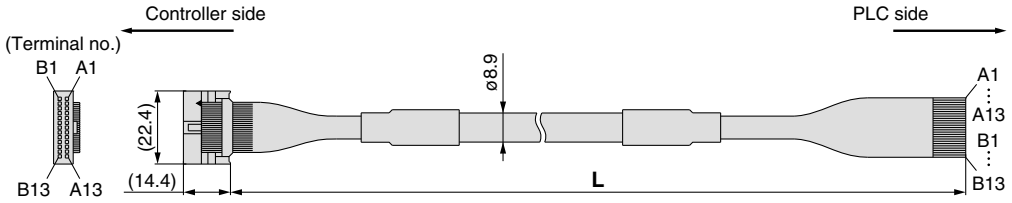

∗ Conductor size: AWG28

Connector pin No.	Cable color	Dot mark	Dot color
A1	Light brown	■	Black
A2	Light brown	■	Red
A3	Yellow	■	Black
A4	Yellow	■	Red
A5	Light green	■	Black
A6	Light green	■	Red
A7	Gray	■	Black
A8	Gray	■	Red
A9	White	■	Black
A10	White	■	Red
A11	Light brown	■ ■	Black
A12	Light brown	■ ■	Red
A13	Yellow	■ ■	Black

Connector pin No.	Cable color	Dot mark	Dot color
B1	Yellow	■ ■	Red
B2	Light green	■ ■	Black
B3	Light green	■ ■	Red
B4	Gray	■ ■	Black
B5	Gray	■ ■	Red
B6	White	■ ■	Black
B7	White	■ ■	Red
B8	Light brown	■ ■ ■	Black
B9	Light brown	■ ■ ■	Red
B10	Yellow	■ ■ ■	Black
B11	Yellow	■ ■ ■	Red
B12	Light green	■ ■ ■	Black
B13	Light green	■ ■ ■	Red
—	Shield		

[Noise filter set for Servo motor (24 VDC)]

LEC − NFA

Contents of the set: 2 noise filters (Produced by WURTH ELEKTRONIK: 74271222)

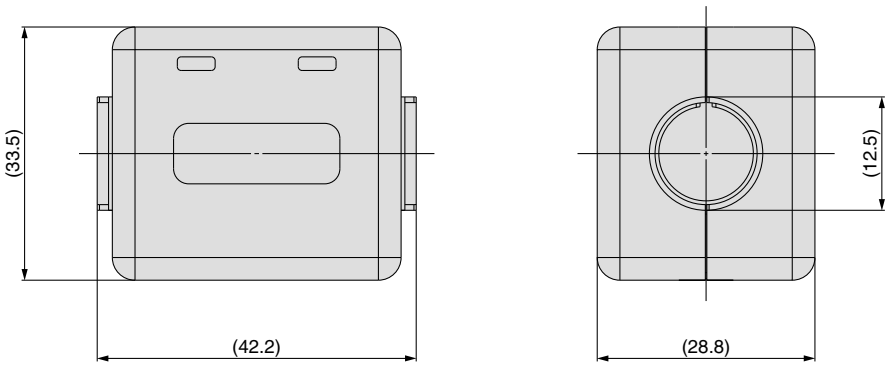

∗ Refer to the LECA6 series Operation Manual for installation.

Series LEC

Controller Setting Software/LEC-W1

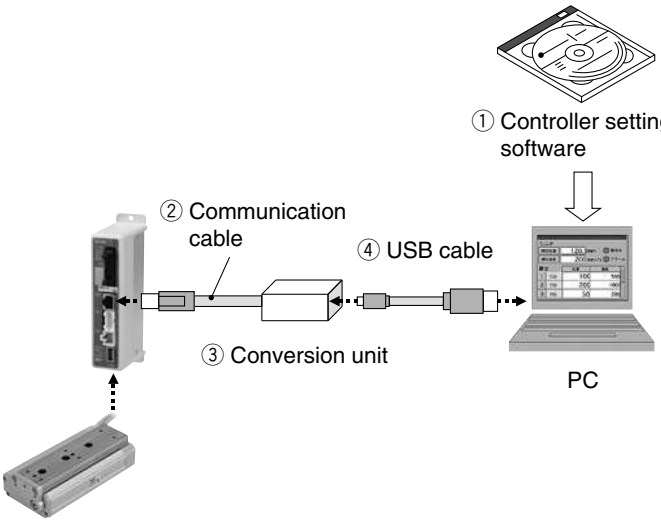

How to Order

LEC－W1

Controller setting software
(Japanese and English are available.)

Contents

① **Controller setting software (CD-ROM)**
② **Communication cable**
(Cable between the controller and the conversion unit)
③ **Conversion unit**
④ **USB cable**
(Cable between the PC and the conversion unit)

Hardware Requirements

PC/AT compatible machine installed with Windows XP and equipped with USB1.1 or USB2.0 ports.

∗ Windows® and Windows XP® are registered trademarks of Microsoft Corporation.

Screen Example

Easy mode screen example

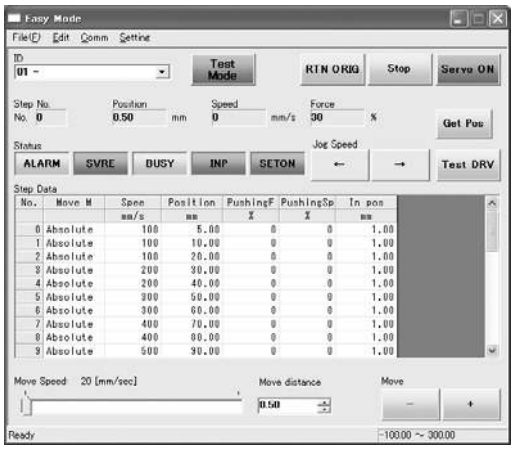

Easy operation and simple setting

- Allowing to set and display actuator step data such as position, speed, force, etc.
- Setting of step data and testing of the drive can be performed on the same page.
- Can be used to jog and move at a constant rate.

Normal mode screen example

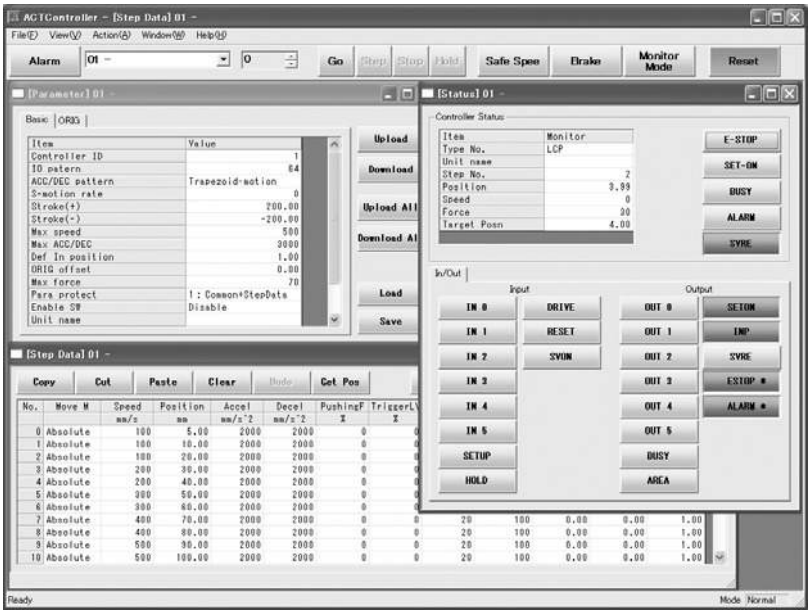

Detail setting

- Step data can be set in detail.
- Signals and terminal status can be monitored.
- Parameters can be set.
- JOG and constant rate movement, return to origin, test operation and testing of compulsory output can be performed.

Series LEC
Teaching Box/LEC-T1

Standard functions
- **Chinese character display**
- **Stop switch is provided.**

Option
- **Enable switch is provided.**

How to Order

LEC – T1 – 3 J G

Teaching box

Cable length

3	3 m

Initial language

J	Japanese
E	English

Stop switch

G	Equipped with stop switch

Enable switch

Nil	None
S	Equipped with enable switch

∗ Interlock switch for jog test function

Specifications

Item	Description
Switch	Stop switch, Enable switch (Option)
Cable length	3 m
Enclosure	IP64 (Except connector)
Operating temperature range (°C)	5 to 50 (No condensation)
Operating humidity range (%)	35 to 85
Weight (g)	350 (Except cable)

∗ The EMC compliance for the teaching box was tested with LECP6 controller and applicable actuator only.

Easy Mode

Function	Description
Step data	• Setting of step data
Jog	• Jog operation • Return to origin
Test	• 1 step operation • Return to origin
Monitor	• Display of axis and step data No. • Display of two items selected from Position, Speed, Force.
Alarm	• Display of active alarm • Alarm reset
TB setting	• Reconnection of axis • Setting of easy/normal mode • Setting of step data and selection of item for monitoring function

Menu Operations Flowchart

Menu
- Data
- Monitor
- Jog
- Test
- Alarm
- TB setting

Data
Step data No.
Setting of two items selected below
(Position, Speed, Force, Acceleration, Deceleration)

Monitor
Display of step No.
Display of two items selected below
(Position, Speed, Force)

Jog
Return to origin
Jog operation

Test
1 step operation

Alarm
Display of active alarm
Alarm reset

TB setting
Reconnect
Easy/Normal
Set item

Normal Mode

Function	Description
Step data	• Step data setting
Parameter	• Parameters setting
Test	• Jog operation/Constant rate movement • Return to origin • Test drive (Specify a maximum of 5 step data and operate.) • Compulsory output (Compulsory signal output, Compulsory terminal output)
Monitor	• Drive monitor • Output signal monitor • Input signal monitor • Output terminal monitor • Input terminal monitor
Alarm	• Active alarm display (Alarm reset) • Alarm log record display
File	• Data saving Save the step data and parameters of the controller which is being used for communication (it is possible to save four files, with one set of step data and parameters defined as one file). • Load to controller Loads the data which is saved in the teaching box to the controller which is being used for communication. • Delete the saved data.
TB setting	• Display setting (Easy/Normal mode) • Language setting (Japanese/English) • Backlight setting • LCD contrast setting • Beep sound setting • Max. connection axis • Distance unit (mm/inch)
Reconnect	• Reconnection of axis

Menu Operations Flowchart

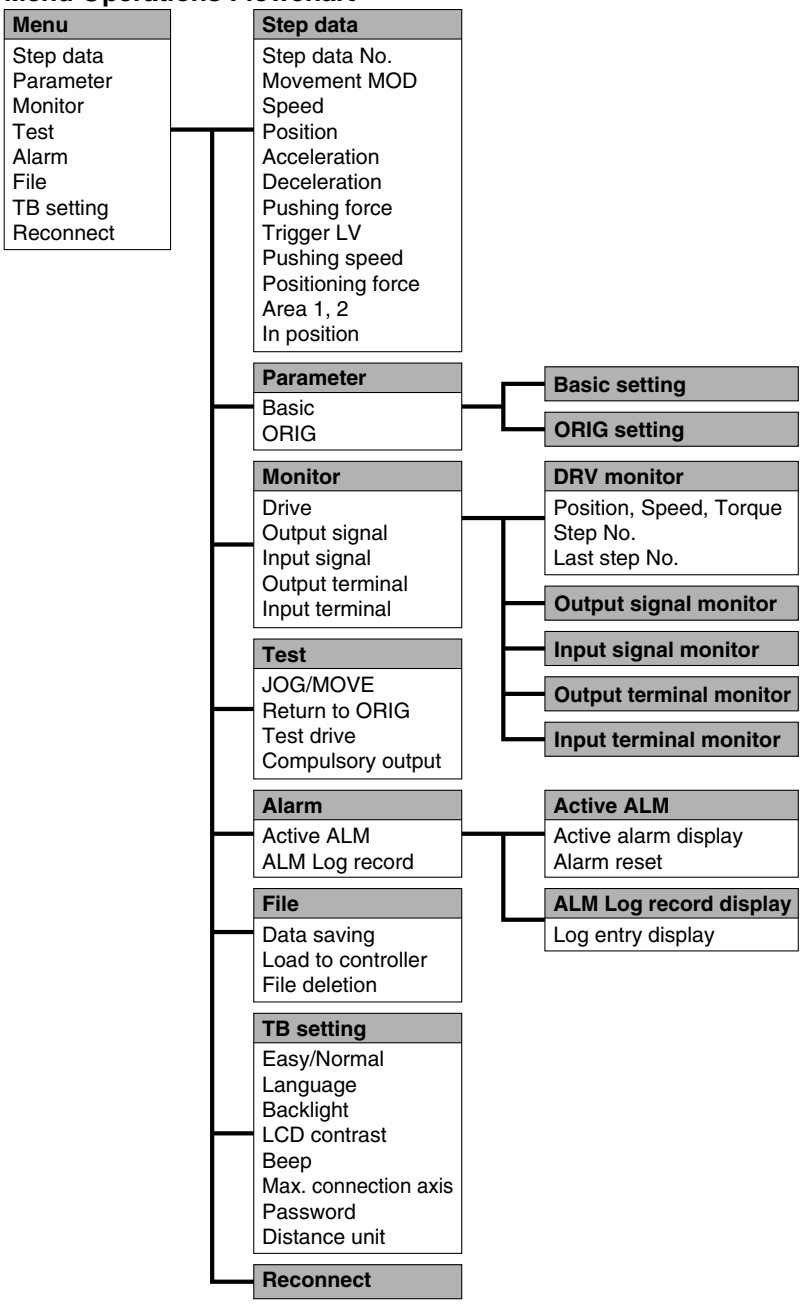

Dimensions

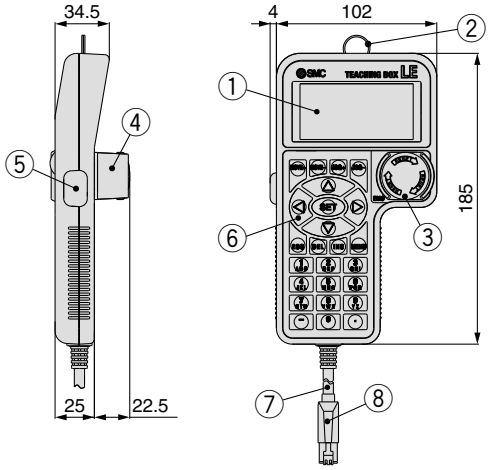

No.	Description	Function
1	**LCD**	A screen of liquid crystal display (with backlight)
2	**Ring**	A ring for hanging the teaching box
3	**Stop switch**	Locks and stops operation when this switch is pressed. The lock is released when it is turned to the right.
4	**Stop switch guard**	A guard for the stop switch
5	**Enable switch (Option)**	Prevents unintentional operation (unexpected operation) of the jog test function. Other functions such as data change are not covered.
6	**Key switch**	Switch for each input
7	**Cable**	Length: 3 meters
8	**Connector**	A connector connected to CN4 of the controller

Series LEC
Controller and Peripheral Devices/ Specific Product Precautions 1

Be sure to read before handling.
Refer to back page 1 for Safety Instructions.

Design/Selection

⚠Warning

1. Be sure to apply the specified voltage.
Otherwise, malfunction and breakage may be caused. If the applied voltage is lower than the specified, it is possible that the load cannot be moved due to an internal voltage drop of the controller. Please check the operating voltage before use.

2. Do not operate the product beyond the specifications.
Otherwise, a fire, malfunction or actuator damage can result. Please check the specifications before use.

3. Install an emergency stop circuit outside of the enclosure.
Please install an emergency stop outside of the enclosure so that it can stop the system operation immediately and intercept the power supply.

4. In order to prevent damage due to the breakdown and the malfunction of the controller and its peripheral devices, a backup system should be established previously by giving a multiple-layered structure or a fail-safe design to the equipment, etc.

5. If a danger against the personnel is expected due to an abnormal heat generation, smoking, ignition, etc., of the controller and its peripheral devices, cut off the power supply for the product and the system immediately.

Handling

⚠Warning

1. Do not touch the inside of the controller and its peripheral devices.
It may cause an electric shock or damage to the controller.

2. Do not perform the operation or setting of the product with wet hands.
It may cause an electric shock.

3. Product with damage or the one lacking of any components should not be used.
It may cause an electric shock, fire, or injury.

4. Use only the specified combination between the electric actuator and controller.
It may cause damage to the actuator or the controller.

5. Be careful not to be caught or hit by the workpiece while the actuator is moving.
It may cause an injury.

6. Do not connect the power supply or power on the product before confirming the area to which the workpiece moves is safe.
The movement of the workpiece may cause an accident.

7. Do not touch the product when it is energized and for some time after power has been disconnected, as it is very hot.
It may lead to a burn due to the high temperature.

8. Check the voltage using a tester for more than 5 minutes after power-off in case of installation, wiring and maintenance.
It may cause an electric shock, fire, or injury.

Handling

⚠Warning

9. Static electricity may cause malfunction or break the controller. Do not touch the controller while power is supplied.
When touching the controller for maintenance, take sufficient measures to eliminate static electricity.

10. Do not use the product in an area where dust, powder dust, water, chemicals or oil is in the air.
It will cause failure or malfunction.

11. Do not use the product in an area where a magnetic field is generated.
It will cause failure or malfunction.

12. Do not install the product in the environment of flammable gas, explosive gas and corrosive gas.
It could lead to fire, explosion and corrosion.

13. Radiant heat from strong heat supplies such as a furnace, direct sunlight, etc., should not be applied to the product.
It will cause failure of the controller or its peripheral devices.

14. Do not use the product in an environment subject to a temperature cycle.
It will cause failure of the controller or its peripheral devices.

15. Do not use the product in a place where surges are generated.
When there are units that generate a large amount of surge around the product (e.g., solenoid type lifters, high frequency induction furnaces, motors, etc.), this may cause deterioration or damage to the product's internal circuit. Avoid supplies of surge generation and crossed lines.

16. Do not install the product in an environment under the effect of vibrations and impacts.
It will cause failure or malfunction.

17. When a surge generating load such as a relay or solenoid valve is directly driven, use a product that incorporates a surge absorption element.

Installation

⚠Warning

1. Install the controller and its peripheral devices on a fire-proof material.
A direct installation on or near a flammable material may cause fire.

2. Do not install the product in a place subject to vibrations and impacts.
It will cause failure or malfunction.

3. Do not mount the controller and its peripheral devices together with a large-sized electromagnetic contactor or no-fuse breaker, which generates vibration, on the same panel. Mount them on different panels, or keep the controller and its peripheral devices away from such a vibration supply.

4. Install the controller and its peripheral devices on a flat surface.
If the mounting surface is distorted or not flat, an unacceptable force may be added to the housing, etc., to cause troubles.

Series LEC
Controller and Peripheral Devices/ Specific Product Precautions 2

Be sure to read before handling.
Refer to back page 1 for Safety Instructions.

Power Supply

⚠Caution

1. **Use a power supply that has low noise between lines and between power and ground.**
   In cases where noise is high, an isolation transformer should be used.
2. **The power supplies should be separated between the controller power and the I/O signal power and both of them do not use the power supply of "inrush current prevention type".**
   If the power supply is "inrush current prevention type", a voltage drop may be caused during the acceleration of the actuator.
3. **To prevent surges from lightning, an appropriate measure should be taken. Ground the surge absorber for lightning separately from the grounding of the controller and its peripheral devices.**

Grounding

⚠Warning

1. **Be sure to carry out grounding in order to ensure the noise tolerance.**
2. **Dedicated grounding should be used.**
   Grounding should be to a D-class ground. (Ground resistance of 100 Ω or less)
3. **Grounding should be performed near the controller and its peripheral devices to shorten the grounding distance.**
4. **In the unlikely event that malfunction is caused by ground, please disconnect the unit from ground.**

Maintenance

⚠Warning

1. **Perform a maintenance check periodically.**
   Confirm wiring and screws are not loose.
   Loose screws or wires may cause unintentional malfunction.
2. **Conduct an appropriate functional inspection after completing the maintenance.**
   At times where the equipment or machinery does not operate properly, conduct an emergency stop of the system. Otherwise, an unexpected malfunction may occur and it will become impossible to secure the safety. Conduct a test of the emergency stop in order to confirm the safety of the equipment.
3. **Do not disassemble, modify or repair the controller and its peripheral devices.**
4. **Do not put anything conductive or flammable inside of the controller.**
   It may cause a fire.
5. **Do not conduct an insulation resistance test and withstand voltage test on this product.**
6. **Ensure sufficient space for maintenance activities.**
   Design the system that allows required space for maintenance.

⚠ Safety Instructions

These safety instructions are intended to prevent hazardous situations and/or equipment damage. These instructions indicate the level of potential hazard with the labels of **"Caution," "Warning"** or **"Danger."** They are all important notes for safety and must be followed in addition to International Standards (ISO/IEC)*1), and other safety regulations.

⚠ Caution: **Caution** indicates a hazard with a low level of risk which, if not avoided, could result in minor or moderate injury.

⚠ Warning: **Warning** indicates a hazard with a medium level of risk which, if not avoided, could result in death or serious injury.

⚠ Danger : **Danger** indicates a hazard with a high level of risk which, if not avoided, will result in death or serious injury.

*1) ISO 4414: Pneumatic fluid power – General rules relating to systems.
ISO 4413: Hydraulic fluid power – General rules relating to systems.
IEC 60204-1: Safety of machinery – Electrical equipment of machines.
(Part 1: General requirements)
ISO 10218-1: Manipulating industrial robots - Safety.
etc.

⚠Warning

1. The compatibility of the product is the responsibility of the person who designs the equipment or decides its specifications.
Since the product specified here is used under various operating conditions, its compatibility with specific equipment must be decided by the person who designs the equipment or decides its specifications based on necessary analysis and test results. The expected performance and safety assurance of the equipment will be the responsibility of the person who has determined its compatibility with the product. This person should also continuously review all specifications of the product referring to its latest catalog information, with a view to giving due consideration to any possibility of equipment failure when configuring the equipment.

2. Only personnel with appropriate training should operate machinery and equipment.
The product specified here may become unsafe if handled incorrectly. The assembly, operation and maintenance of machines or equipment including our products must be performed by an operator who is appropriately trained and experienced.

3. Do not service or attempt to remove product and machinery/equipment until safety is confirmed.
1. The inspection and maintenance of machinery/equipment should only be performed after measures to prevent falling or runaway of the driven objects have been confirmed.
2. When the product is to be removed, confirm that the safety measures as mentioned above are implemented and the power from any appropriate source is cut, and read and understand the specific product precautions of all relevant products carefully.
3. Before machinery/equipment is restarted, take measures to prevent unexpected operation and malfunction.

4. Contact SMC beforehand and take special consideration of safety measures if the product is to be used in any of the following conditions.
1. Conditions and environments outside of the given specifications, or use outdoors or in a place exposed to direct sunlight.
2. Installation on equipment in conjunction with atomic energy, railways, air navigation, space, shipping, vehicles, military, medical treatment, combustion and recreation, or equipment in contact with food and beverages, emergency stop circuits, clutch and brake circuits in press applications, safety equipment or other applications unsuitable for the standard specifications described in the product catalog.
3. An application which could have negative effects on people, property, or animals requiring special safety analysis.
4. Use in an interlock circuit, which requires the provision of double interlock for possible failure by using a mechanical protective function, and periodical checks to confirm proper operation.

⚠Caution

1. The product is provided for use in manufacturing industries.
The product herein described is basically provided for peaceful use in manufacturing industries.
If considering using the product in other industries, consult SMC beforehand and exchange specifications or a contract if necessary.
If anything is unclear, contact your nearest sales branch.

Limited warranty and Disclaimer/ Compliance Requirements

The product used is subject to the following "Limited warranty and Disclaimer" and "Compliance Requirements".
Read and accept them before using the product.

Limited warranty and Disclaimer

1. The warranty period of the product is 1 year in service or 1.5 years after the product is delivered.*2)
Also, the product may have specified durability, running distance or replacement parts. Please consult your nearest sales branch.
2. For any failure or damage reported within the warranty period which is clearly our responsibility, a replacement product or necessary parts will be provided.
This limited warranty applies only to our product independently, and not to any other damage incurred due to the failure of the product.
3. Prior to using SMC products, please read and understand the warranty terms and disclaimers noted in the specified catalog for the particular products.

***2) Vacuum pads are excluded from this 1 year warranty.**
A vacuum pad is a consumable part, so it is warranted for a year after it is delivered.
Also, even within the warranty period, the wear of a product due to the use of the vacuum pad or failure due to the deterioration of rubber material are not covered by the limited warranty.

Compliance Requirements

1. The use of SMC products with production equipment for the manufacture of weapons of mass destruction (WMD) or any other weapon is strictly prohibited.
2. The exports of SMC products or technology from one country to another are governed by the relevant security laws and regulations of the countries involved in the transaction. Prior to the shipment of a SMC product to another country, assure that all local rules governing that export are known and followed.

⚠ Safety Instructions	Be sure to read "Handling Precautions for SMC Products" (M-E03-3) before using.

SMC

Controller

Step data input type ····· **Page 13**

Step Motor
(Servo/24 VDC)
Series LECP6

Programless type ····· **Page 24**

Step Motor
(Servo/24 VDC)
Series LECP1

Controller (Step data input type)
Step Motor (Servo/24 VDC)
Series LECP6

CE

RoHS

How to Order

LE C P 6 N □ □ – □

Controller

Compatible motor

P	Step motor (Servo/24 VDC)

Number of step data (Points)

6	64

Parallel I/O type

N	NPN
P	PNP

I/O cable length [m]

Nil	Without cable
1	1.5
3	3
5	5

Option

Nil	Screw mounting
D Note)	DIN rail mounting

Note) DIN rail is not included. Order it separately.

Actuator part number

(Except cable specifications and actuator options)
Example: Enter "LEL25MT-100" for the LEL25MT-100B-R36N3.

∗ When controller equipped type (-□6N□/-□6P□) is selected when ordering the LE series, you do not need to order this controller.

The controller is sold as single unit after the compatible actuator is set.

Confirm that the combination of the controller and the actuator is correct.

<Check the following before use.>

① Check the actuator label for model number. This matches the controller.

② Check Parallel I/O configuration matches (NPN or PNP).

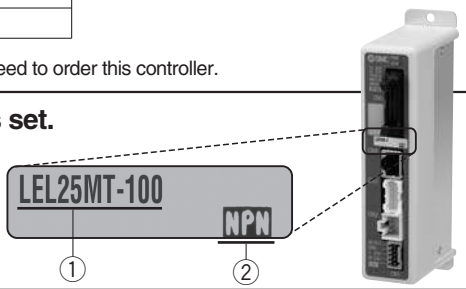

∗ Refer to the operation manual for using the products. Please download it via our website, http://www.smcworld.com

Specifications

Basic Specifications

Item	Specifications
Compatible motor	Step motor (Servo/24 VDC)
Power supply Note 1)	Power voltage: 24 VDC ±10% Current consumption: 3 A (Peak 5 A) Note 2) [Including motor drive power, control power, stop, lock release]
Parallel input	11 inputs (Photo-coupler isolation)
Parallel output	13 outputs (Photo-coupler isolation)
Compatible encoder	Incremental A/B phase (800 pulse/rotation)
Serial communication	RS485 (Modbus protocol compliant)
Memory	EEPROM
LED indicator	LED (Green/Red) one of each
Lock control	Forced-lock release terminal Note 3)
Cable length [m]	I/O cable: 5 or less Actuator cable: 20 or less
Cooling system	Natural air cooling
Operating temperature range	32 to 104°F (0 to 40°C) (No freezing)
Operating humidity range [%RH]	90 or less (No condensation)
Storage temperature range	14 to 140°F (–10 to 60°F) (No freezing)
Storage humidity range [%RH]	90 or less (No condensation)
Insulation resistance [MΩ]	Between the housing (radiation fin) and SG terminal 50 (500 VDC)
Weight	5.3 oz (150 g) (Screw mounting) 6.0 oz (170 g) (DIN rail mounting)

Note 1) Do not use the power supply of "inrush current prevention type" for the controller power supply.
Note 2) The power consumption changes depending on the actuator model. Refer to the specifications of actuator for more details.
Note 3) Applicable to non-magnetizing lock.

SMC

How to Mount

a) Screw mounting (LECP6□□-□)
(Installation with two M4 screws)

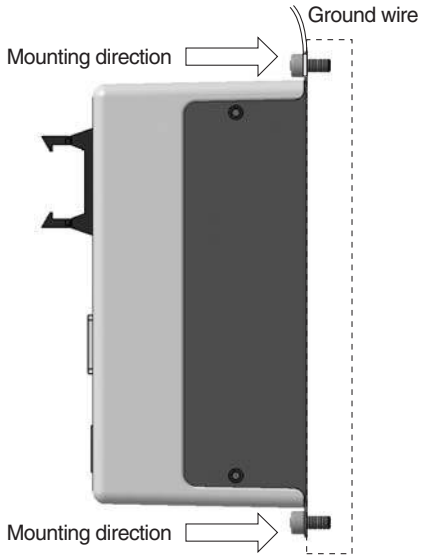

b) DIN rail mounting (LECP6□□D-□)
(Installation with the DIN rail)

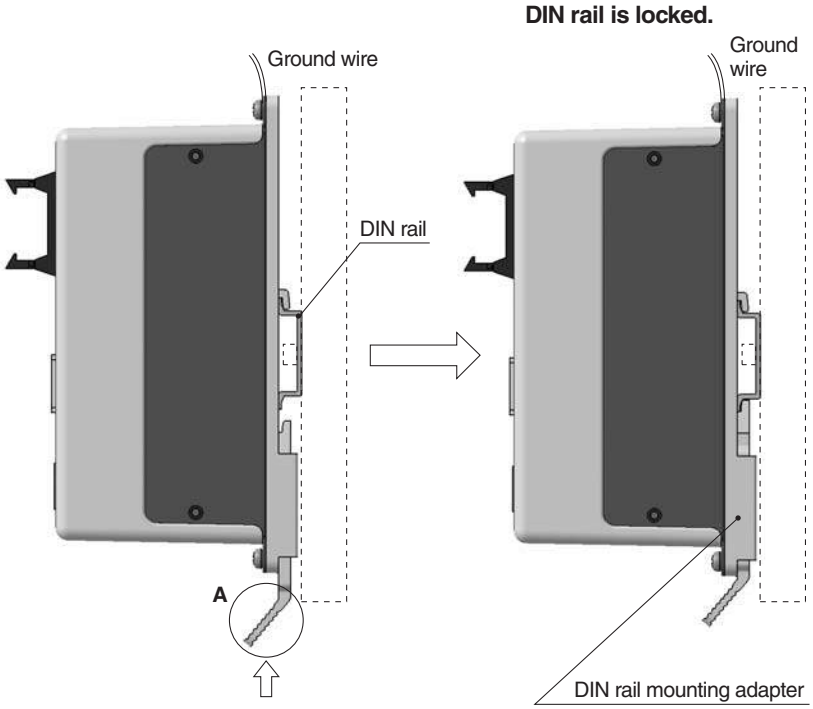

Hook the controller on the DIN rail and press the lever of section **A** in the arrow direction to lock it.

DIN rail
AXT100-DR-□

∗ For □, enter a number from the "No." line in the table below.
Refer to the dimensions on page 15 for the mounting dimensions.

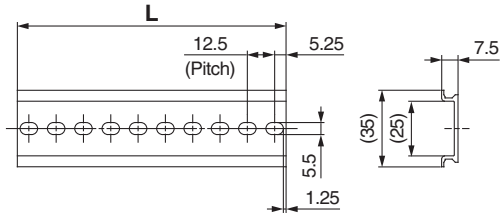

L Dimension [mm]

No.	1	2	3	4	5	6	7	8	9	10	11	12	13	14	15	16	17	18	19	20
L	23	35.5	48	60.5	73	85.5	98	110.5	123	135.5	148	160.5	173	185.5	198	210.5	223	235.5	248	260.5

No.	21	22	23	24	25	26	27	28	29	30	31	32	33	34	35	36	37	38	39	40
L	273	285.5	298	310.5	323	335.5	348	360.5	373	385.5	398	410.5	423	435.5	448	460.5	473	485.5	498	510.5

DIN rail mounting adapter
LEC-D0 (with 2 mounting screws)

This should be used when the DIN rail mounting adapter is mounted onto the screw mounting type controller afterwards.

Dimensions

a) Screw mounting (LECP6□□-□)

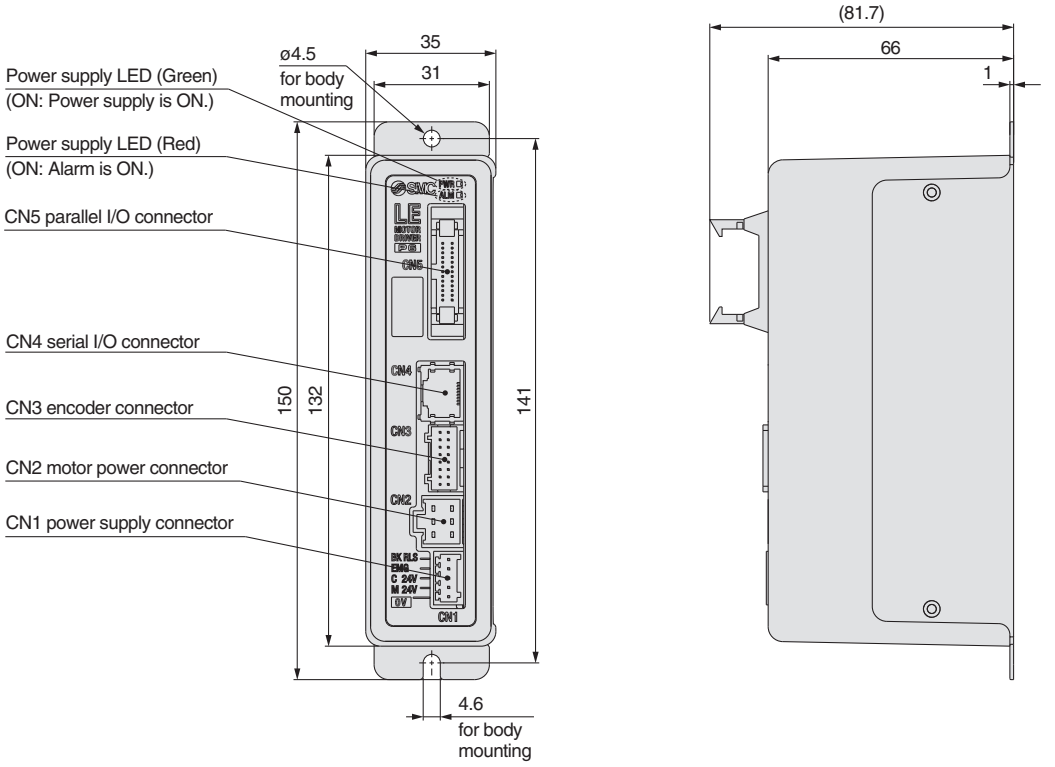

b) DIN rail mounting (LECP6□□D-□)

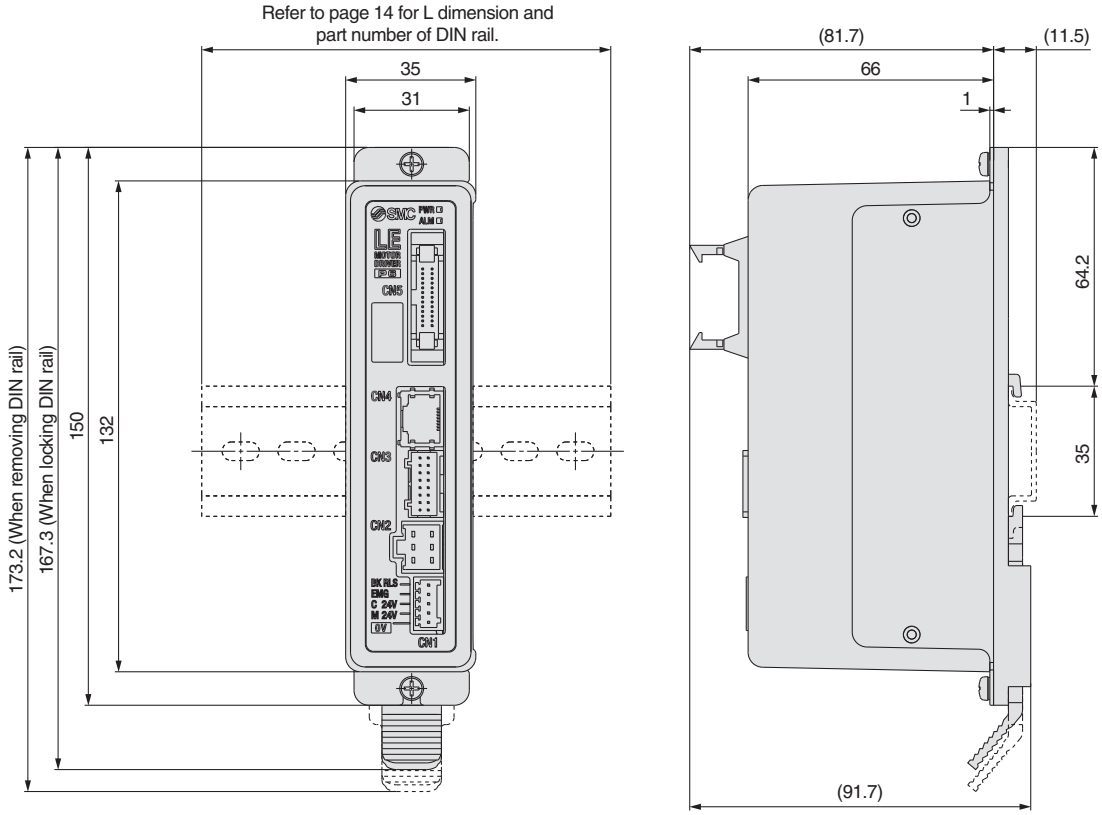

Wiring Example 1

Power Supply Connector: CN1

∗ Power supply plug is an accessory.

CN1 Power Supply Connector Terminal for LECP6 (PHOENIX CONTACT FK-MC0.5/5-ST-2.5)

Terminal name	Function	Details
0V	Common supply (–)	M24V terminal/C24V terminal/EMG terminal/BK RLS terminal are common (–).
M24V	Motor power supply (+)	Motor power supply (+) supplied to the controller
C24V	Control power supply (+)	Control power supply (+) supplied to the controller
EMG	Stop (+)	Input (+) for releasing the stop
BK RLS	Lock release (+)	Input (+) for releasing the lock

Power supply plug for LECP6

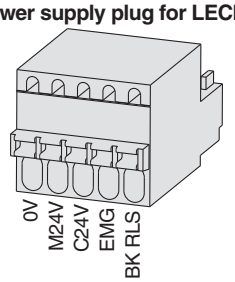

Wiring Example 2

Parallel I/O Connector: CN5

∗ When you connect a PLC, etc., to the CN5 parallel I/O connector, please use the I/O cable (LEC-CN5-□).
∗ The wiring should be changed depending on the type of the parallel I/O (NPN or PNP).

Wiring diagram

LECP6N□□-□ (NPN)

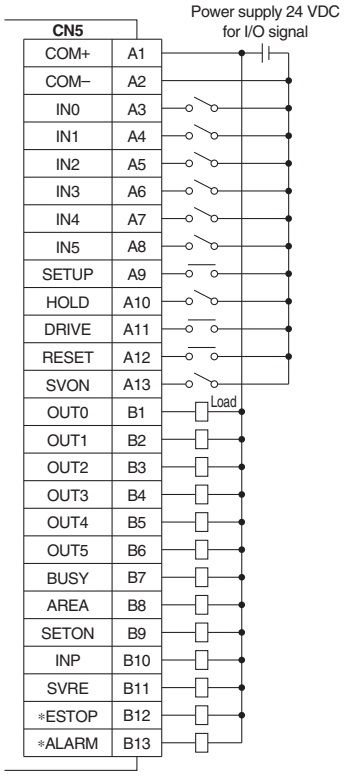

LECP6P□□-□ (PNP)

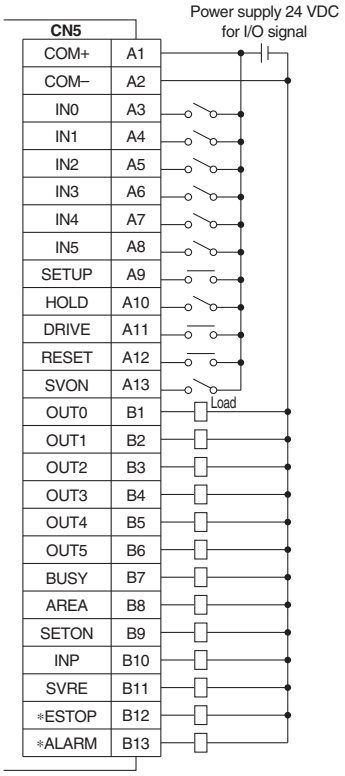

Input Signal

Name	Details
COM+	Connects the power supply 24 V for input/output signal
COM–	Connects the power supply 0 V for input/output signal
IN0 to IN5	Step data specified Bit No. (Input is instructed in the combination of IN0 to 5.)
SETUP	Instruction to return to the original position
HOLD	Operation is temporarily stopped
DRIVE	Instruction to drive
RESET	Alarm reset and operation interruption
SVON	Servo ON instruction

Output Signal

Name	Details
OUT0 to OUT5	Outputs the step data no. during operation
BUSY	Outputs when the actuator is moving
AREA	Outputs within the step data area output setting range
SETON	Outputs when returning to the original position
INP	Outputs when target position or target force is reached (Turns on when the positioning or pushing is completed.)
SVRE	Outputs when servo is on
∗ESTOP Note)	Not output when EMG stop is instructed
∗ALARM Note)	Not output when alarm is generated

Note) Signal of negative-logic circuit (N.C.)

Step Data Setting

Step data setting for positioning

In this setting, the actuator moves toward and stops at the target position. The following diagram shows the setting items and operation. The setting items and set values for this operation are stated below.

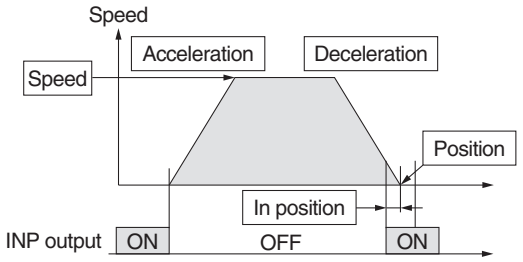

◎: Need to be set.
○: Need to be adjusted as required.
—: Setting is not required.

Step Data (Positioning)

Necessity	Item	Details
◎	Movement method	When the absolute position is required, set Absolute. When the relative position is required, set Relative.
◎	Speed	Transfer speed to the target position
◎	Position	Target position
◎	Acceleration	Parameter which defines how rapidly the actuator reaches the speed set. The higher the set value, the faster it reaches the speed set.
◎	Deceleration	Parameter which defines how rapidly the actuator comes to stop. The higher the set value, the quicker it stops.
◎	Pushing force	Set 0. (If values 1 to 100 are set, the operation will be changed to the pushing operation.)
—	Trigger LV	Setting is not required.
—	Pushing speed	Setting is not required.
○	Positioning force	Max. torque during the positioning operation (No specific change is required.)
○	Area 1, Area 2	Condition that turns on the AREA output signal.
○	In position	Condition that turns on the INP output signal. When the actuator enters the range of [in position], the INP output signal turns on. (It is unnecessary to change this from the initial value.) When it is necessary to output the arrival signal before the operation is completed, make the value larger.

Signal Timing

Return to Origin

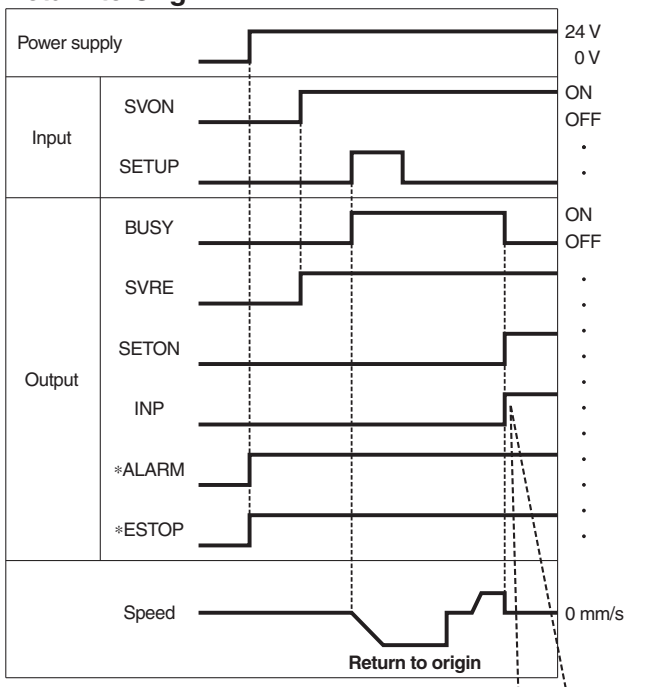

"∗ALARM" and "∗ESTOP" are expressed as negative-logic circuit.

Positioning Operation

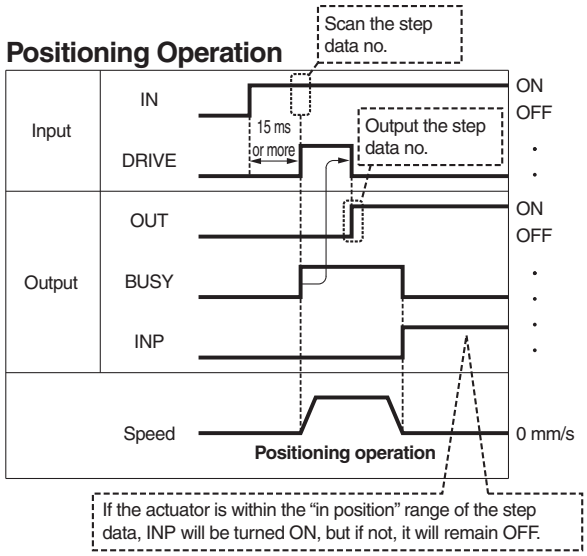

∗ "OUT" is output when "DRIVE" is changed from ON to OFF.
(When power supply is applied, "DRIVE" or "RESET" is turned ON or "∗ESTOP" is turned OFF, all of the "OUT" outputs are turned OFF.)

HOLD

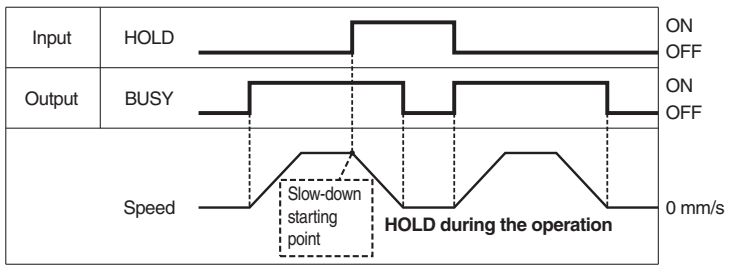

∗ When the actuator is in the positioning range in the pushing operation, it does not stop even if HOLD signal is input.

Reset

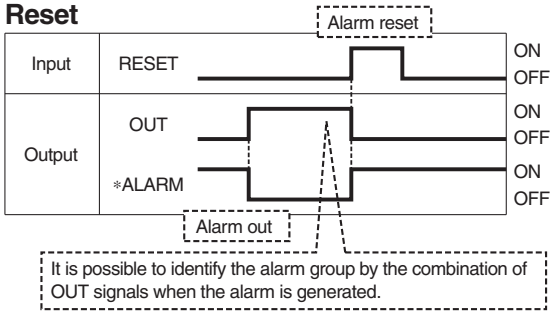

"∗ALARM" is expressed as negative-logic circuit.

Options: Actuator Cable

[Robotic cable, standard cable for step motor (servo/24 VDC)]

LE – CP – 1 – □

Cable length(L)[m]

1	1.5
3	3
5	5
8	8*
A	10*
B	15*
C	20*

* Produced upon receipt of order (Robotic cable only)

Cable type

Nil	Robotic cable (Flexible cable)
S	Standard cable

LE-CP-$\begin{smallmatrix}1\\3\\5\end{smallmatrix}$/Cable length: 1.5 m, 3 m, 5 m

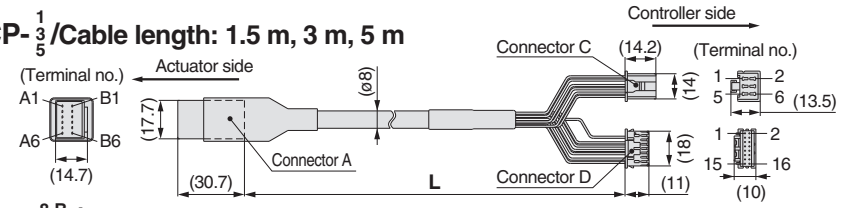

LE-CP-$\begin{smallmatrix}8\\A\\C\end{smallmatrix}\begin{smallmatrix}B\\\\\end{smallmatrix}$/Cable length: 8 m, 10 m, 15 m, 20 m
(* Produced upon receipt of order)

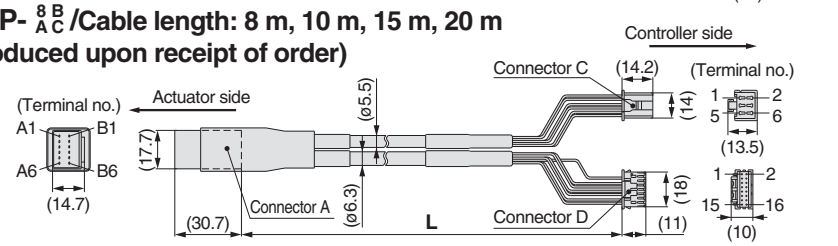

Signal	Connector A terminal no.
A	B-1
$\overline{A}$	A-1
B	B-2
$\overline{B}$	A-2
COM-A/COM	B-3
COM-B/–	A-3
Vcc	B-4
GND	A-4
$\overline{A}$	B-5
A	A-5
$\overline{B}$	B-6
B	A-6

Shield

Cable color	Connector C terminal no.
Brown	2
Red	1
Orange	6
Yellow	5
Green	3
Blue	4

Cable color	Connector D terminal no.
Brown	12
Black	13
Red	7
Black	6
Orange	9
Black	8
—	3

[Robotic cable, standard cable with lock and sensor for step motor (servo/24 VDC)]

LE – CP – 1 – B – □

Cable length(L)[m]

1	1.5
3	3
5	5
8	8*
A	10*
B	15*
C	20*

* Produced upon receipt of order (Robotic cable only)

With lock and sensor

Cable type

Nil	Robotic cable (Flexible cable)
S	Standard cable

LE-CP-$\begin{smallmatrix}1\\3\\5\end{smallmatrix}$/Cable length: 1.5 m, 3 m, 5 m

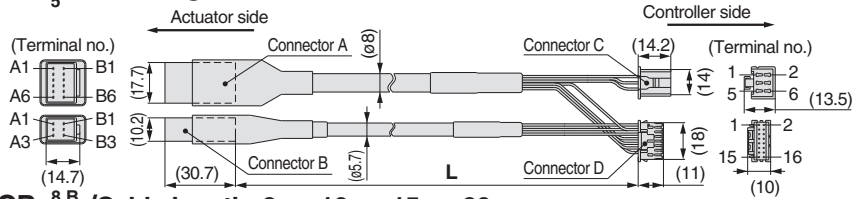

LE-CP-$\begin{smallmatrix}8\\A\\C\end{smallmatrix}\begin{smallmatrix}B\\\\\end{smallmatrix}$/Cable length: 8 m, 10 m, 15 m, 20 m
(* Produced upon receipt of order)

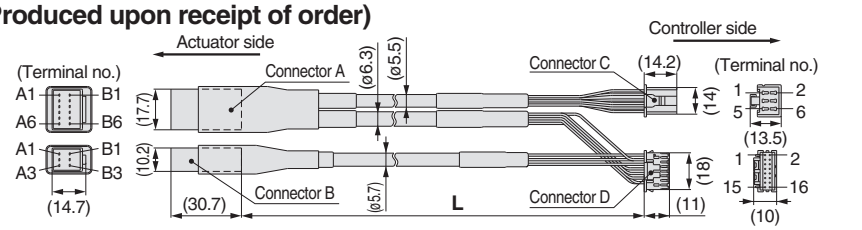

Signal	Connector A terminal no.
A	B-1
$\overline{A}$	A-1
B	B-2
$\overline{B}$	A-2
COM-A/COM	B-3
COM-B/–	A-3
Vcc	B-4
GND	A-4
$\overline{A}$	B-5
A	A-5
$\overline{B}$	B-6
B	A-6

Shield

Cable color	Connector C terminal no.
Brown	2
Red	1
Orange	6
Yellow	5
Green	3
Blue	4

Cable color	Connector D terminal no.
Brown	12
Black	13
Red	7
Black	6
Orange	9
Black	8
—	3

Signal	Connector B terminal no.
Lock (+)	B-1
Lock (–)	A-1
Sensor (+) Note)	B-3
Sensor (–) Note)	A-3

Red	4
Black	5
Brown	1
Blue	2

Note) This is not used for the LEL series.

Options: I/O Cable

I/O cable

LEC − CN5 − 1

Cable length(L) [m]

1	1.5
3	3
5	5

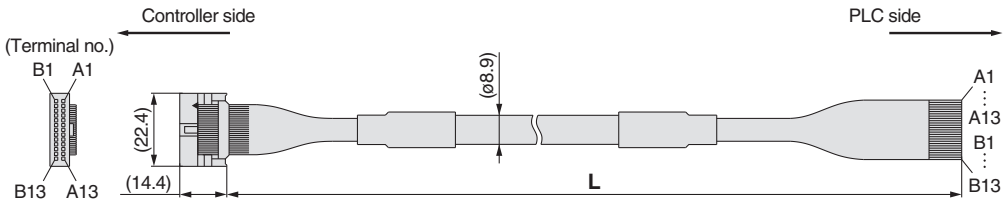

Connector pin no.	Insulation color	Dot mark	Dot color
A1	Light brown	■	Black
A2	Light brown	■	Red
A3	Yellow	■	Black
A4	Yellow	■	Red
A5	Light green	■	Black
A6	Light green	■	Red
A7	Gray	■	Black
A8	Gray	■	Red
A9	White	■	Black
A10	White	■	Red
A11	Light brown	■ ■	Black
A12	Light brown	■ ■	Red
A13	Yellow	■ ■	Black

Connector pin no.	Insulation color	Dot mark	Dot color
B1	Yellow	■ ■	Red
B2	Light green	■ ■	Black
B3	Light green	■ ■	Red
B4	Gray	■ ■	Black
B5	Gray	■ ■	Red
B6	White	■ ■	Black
B7	White	■ ■	Red
B8	Light brown	■ ■ ■	Black
B9	Light brown	■ ■ ■	Red
B10	Yellow	■ ■ ■	Black
B11	Yellow	■ ■ ■	Red
B12	Light green	■ ■ ■	Black
B13	Light green	■ ■ ■	Red
—	Shield		

∗ Conductor size: AWG28

Series LEC

Controller Setting Kit/LEC-W1

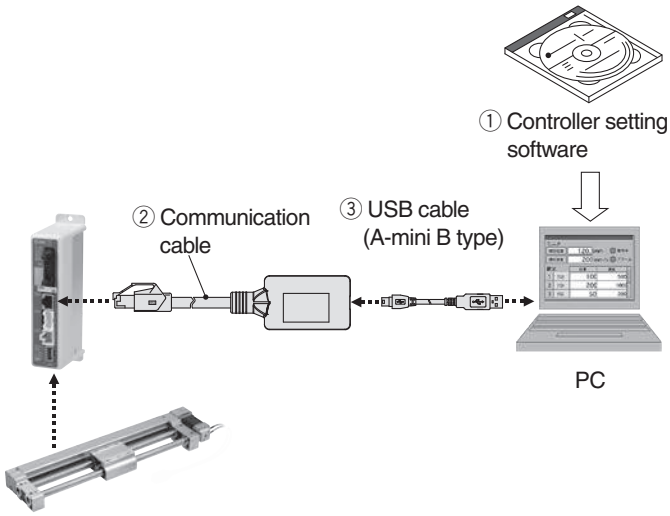

How to Order

LEC – W1

Controller setting kit
(Japanese and English are available.)

Contents

① Controller setting software (CD-ROM)

② Communication cable

③ USB cable
(Cable between the PC and the conversion unit)

Hardware Requirements

PC/AT compatible machine installed with Windows XP and equipped with USB1.1 or USB2.0 ports.

∗ Windows® and Windows XP® are registered trademarks of Microsoft Corporation.

Screen Example

Easy mode screen example

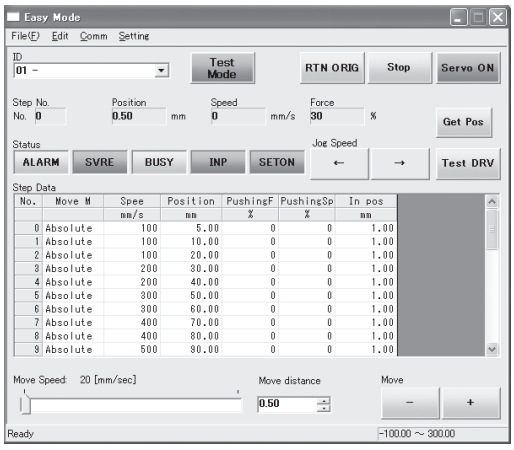

Easy operation and simple setting

- Allowing to set and display actuator step data such as position, speed, force, etc.
- Setting of step data and testing of the drive can be performed on the same page.
- Can be used to jog and move at a constant rate.

Normal mode screen example

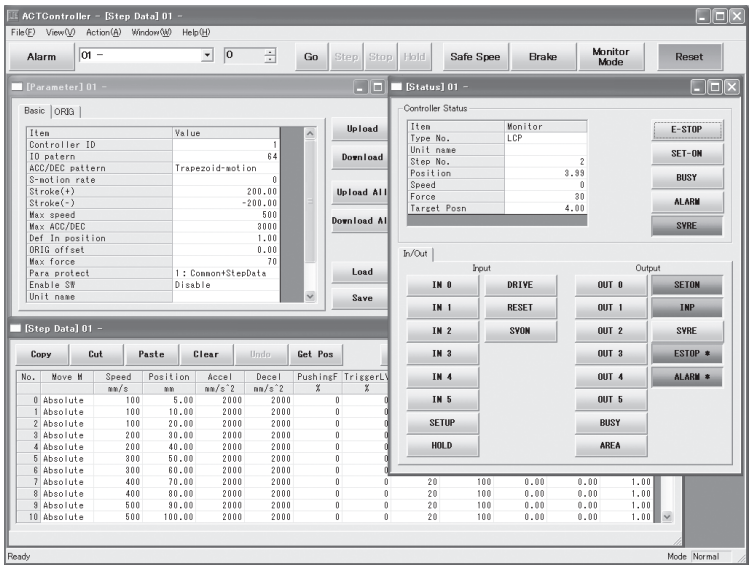

Detailed setting

- Step data can be set in detail.
- Signals and terminal status can be monitored.
- Parameters can be set.
- JOG and constant rate movement, return to origin, test operation and testing of forced output can be performed.

Teaching Box/LEC-T1

How to Order

LEC – T1 – 3 J G

Teaching box

Cable length [m]

3	3

Initial language

J	Japanese
E	English

Enable switch

Nil	None
S	Equipped with enable switch

∗ Interlock switch for jog and test function

Stop switch

G	Equipped with stop switch

Standard functions
- **Chinese character display**
- **Stop switch is provided.**

Option
- **Enable switch is provided.**

Specifications

Item	Description
Switch	Stop switch, Enable switch (Option)
Cable length [m]	3
Enclosure	IP64 (Except connector)
Operating temperature range	41 to 122 °F (5 to 50°C)
Operating humidity range [%RH]	90 or less (No condensation)
Weight	12.3 oz (350g) (Except cable)

Note) CE-compliance
The EMC compliance of the teaching box was tested with the LECP6 series step motor controller (servo/24 VDC) and an applicable actuator.

Easy Mode

Function	Details
Step data	• Setting of step data
Jog	• Jog operation • Return to origin
Test	• 1 step operation • Return to origin
Monitor	• Display of axis and step data no. • Display of two items selected from Position, Speed, Force.
ALM	• Active alarm display • Alarm reset
TB setting	• Reconnection of axis • Setting of easy/normal mode • Setting of step data and selection of items from easy mode monitor

Menu Operations Flowchart

Menu
- Data
- Monitor
- Jog
- Test
- ALM
- TB setting

Data
Step data no.
Setting of two items selected below
(Position, Speed, Force, Acceleration, Deceleration)

Monitor
Display of step no.
Display of two items selected below
(Position, Speed, Force)

Jog
Return to origin
Jog operation

Test
1 step operation

ALM
Active alarm display
Alarm reset

TB setting
Reconnect
Easy/Normal
Set item

Normal Mode

Function	Details
Step data	• Step data setting
Parameter	• Parameters setting
Test	• Jog operation/Constant rate movement • Return to origin • Test drive (Specify a maximum of 5 step data and operate.) • Forced output (Forced signal output, Forced terminal output)
Monitor	• Drive monitor • Output signal monitor • Input signal monitor • Output terminal monitor • Input terminal monitor
ALM	• Active alarm display (Alarm reset) • Alarm log record display
File	• Data saving Save the step data and parameters of the controller which is being used for communication (it is possible to save four files, with one set of step data and parameters defined as one file). • Load to controller Loads the data which is saved in the teaching box to the controller which is being used for communication. • Delete the saved data.
TB setting	• Display setting (Easy/Normal mode) • Language setting (Japanese/English) • Backlight setting • LCD contrast setting • Beep sound setting • Max. connection axis • Distance unit (mm/inch)
Reconnect	• Reconnection of axis

Menu Operations Flowchart

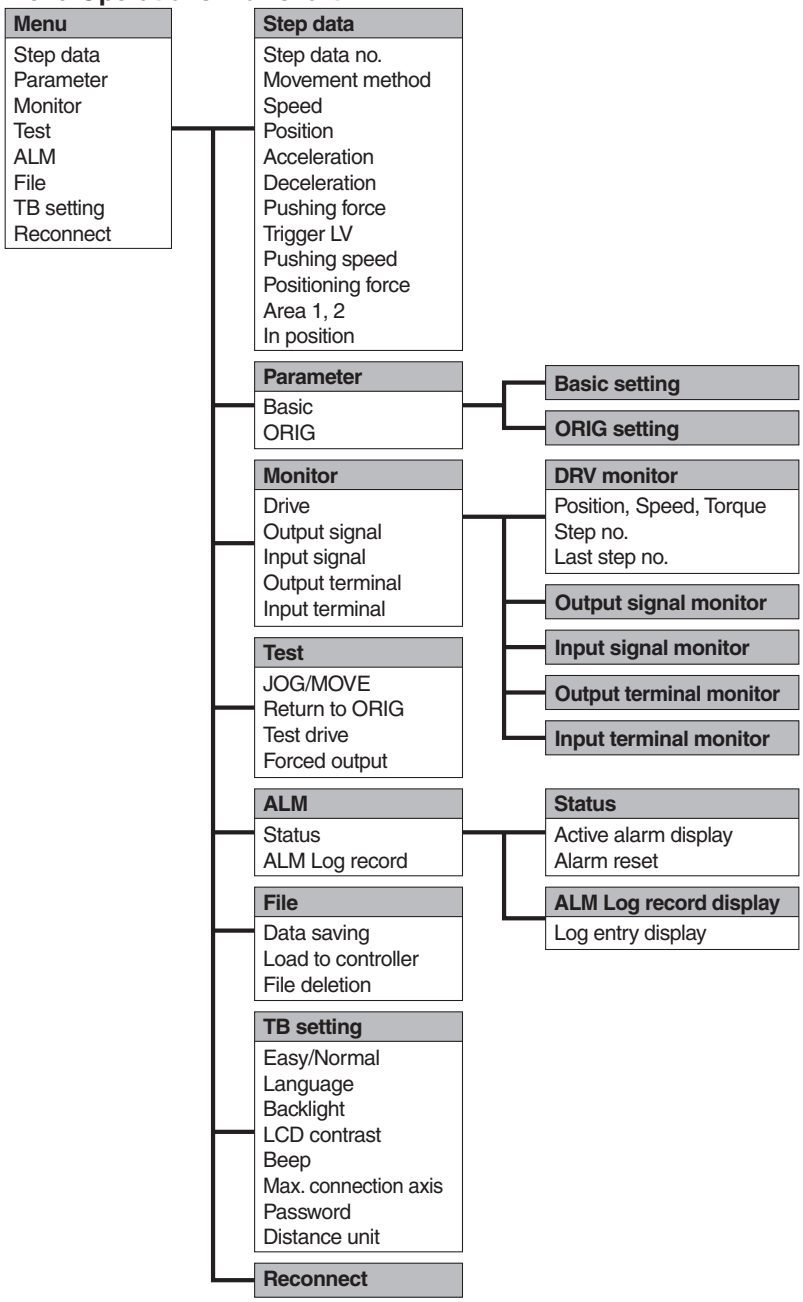

Dimensions

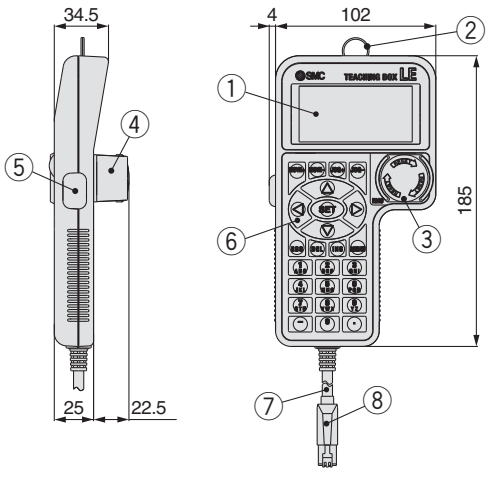

No.	Description	Function
1	**LCD**	A screen of liquid crystal display (with backlight)
2	**Ring**	A ring for hanging the teaching box
3	**Stop switch**	When switch is pushed in, the switch locks and stops. The lock is released when it is turned to the right.
4	**Stop switch guard**	A guard for the stop switch
5	**Enable switch (Option)**	Prevents unintentional operation (unexpected operation) of the jog test function. Other functions such as data change are not covered.
6	**Key switch**	Switch for each input
7	**Cable**	Length: 3 meters
8	**Connector**	A connector connected to CN4 of the controller

Programless Controller
Series LECP1

How to Order

LE C P 1 N 1 – LEL25MT-100

Controller

Compatible motor

P	Step motor (Servo/24 VDC)

Number of step data (Points)

1	14 (Programless)

Parallel I/O type

N	NPN
P	PNP

I/O cable length [m]

Nil	Without cable
1	1.5
3	3
5	5

Actuator part number

(Except cable specifications and actuator options)
Example: Enter "LEL25MT-100" for the LEL25MT-100B-R36N3.

∗ **When controller equipped type (-□1N□/-□1P□) is selected when ordering the LE series, you do not need to order this controller.**

The controller is sold as single unit after the compatible actuator is set.

Confirm that the combination of the controller and the actuator is correct.

∗ Refer to the operation manual for using the products. Please download it via our website, http://www.smcworld.com

Specifications

Basic Specifications

Item	Specifications
Compatible motor	Step motor (Servo/24 VDC)
Power supply Note 1)	Power supply voltage: 24 VDC ±10% Max. current consumption: 3 A (Peak 5 A) Note 2) [Including the motor drive power, control power supply, stop, lock release]
Parallel input	6 inputs (Photo-coupler isolation)
Parallel output	6 outputs (Photo-coupler isolation)
Stop points	14 points (Position number 1 to 14(E))
Compatible encoder	Incremental A/B phase (800 pulse/rotation)
Serial communication	RS485 (Modbus protocol compliant)
Memory	EEPROM
LED indicator	LED (Green/Red) one of each
7-segment LED display Note 3)	1 digit, 7-segment display (red) Figures are expressed in hexadecimal ("10" to "15" in decimal number are expressed as "A" to "F")
Lock control	Forced-lock release terminal Note 4)
Cable length [m]	I/O cable: 5 or less Actuator cable: 20 or less
Cooling system	Natural air cooling
Operating temperature range	32 to 104°F (0 to 40°C) (No freezing)
Operating humidity range [%RH]	90 or less (No condensation)
Storage temperature range	14 to 140°F (–10 to 60°C) (No freezing)
Storage humidity range [%RH]	90 or less (No condensation)
Insulation resistance [MΩ]	Between the housing (radiation fin) and SG terminal 50 (500 VDC)
Weight	4.6 oz (130 g)

Note 1) Do not use the power supply of "inrush current prevention type" for the controller input power supply.
Note 2) The power consumption changes depending on the actuator model. Refer to the each actuator's operation manual etc. for details.
Note 3) "10" to "15" in decimal number are displayed as follows in the 7-segment LED.

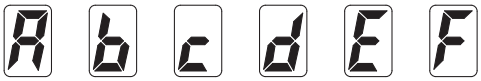

Decimal display	10	11	12	13	14	15
Hexadecimal display	A	b	c	d	E	F

Note 4) Applicable to non-magnetizing lock.

Controller Details

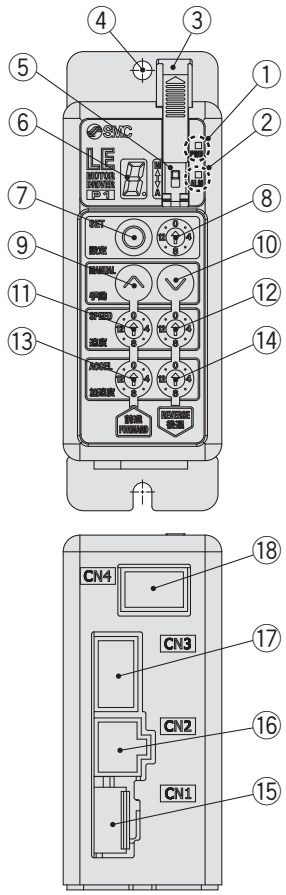

No.	Display	Description	Details
①	**PWR**	Power supply LED	Power supply ON/Servo ON: Green turns on Power supply ON/Servo OFF: Green flashes
②	**ALM**	Alarm LED	With alarm: Red turns on Parameter setting: Red flashes
③	—	Cover	Change and protection of the mode SW (Close the cover after changing SW)
④	—	FG	Frame ground (Tighten the bolt with the nut when mounting the controller. Connect the ground wire.)
⑤	—	Mode switch	Switch the mode between manual and auto.
⑥	—	7-segment LED	Stop position, the value set by ⑧ and alarm information are displayed.
⑦	**SET**	Set button	Decide the settings or drive operation in Manual mode.
⑧	—	Position selecting switch	Assign the position to drive (1 to 14), and the origin position (15).
⑨	**MANUAL**	Manual forward button	Perform forward jog and inching.
⑩		Manual reverse button	Perform reverse jog and inching.
⑪	**SPEED**	Forward speed switch	16 forward speeds are available.
⑫		Reverse speed switch	16 reverse speeds are available.
⑬	**ACCEL**	Forward acceleration switch	16 forward acceleration steps are available.
⑭		Reverse acceleration switch	16 reverse acceleration steps are available.
⑮	**CN1**	Power supply connector	Connect the power supply cable.
⑯	**CN2**	Motor connector	Connect the motor connector.
⑰	**CN3**	Encoder connector	Connect the encoder connector.
⑱	**CN4**	I/O connector	Connect I/O cable.

How to Mount

Controller mounting shown below.

1. Mounting screw (LECP1□□-□)

(Installation with two M4 screws)

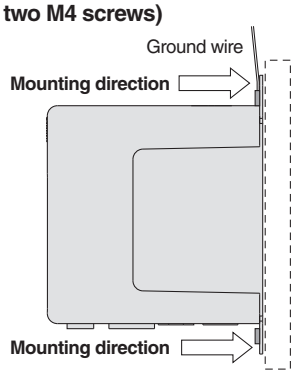

2. Grounding

Tighten the bolt with the nut when mounting the ground wire as shown below.

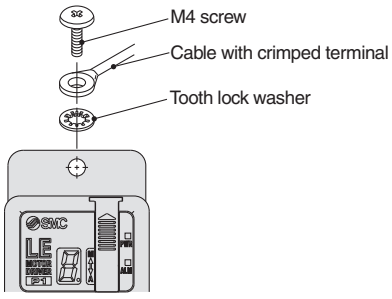

Controller

⚠Caution

- M4 screws, cable with crimping terminal and tooth lock washer are not included. Be sure to carry out grounding earth in order to ensure the noise tolerance.
- Use a watchmaker's screwdriver of the size shown below when changing position switch ⑧ and the set value of the speed/acceleration switch ⑪ to ⑭.

Size
End width **L**: 2.0 to 2.4 [mm]
End thickness **W**: 0.5 to 0.6 [mm]

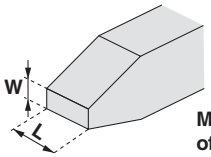

Magnified view of the end of the screwdriver

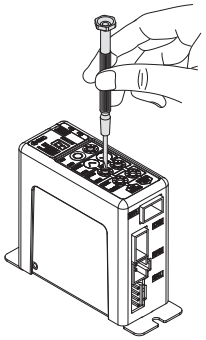

Dimensions

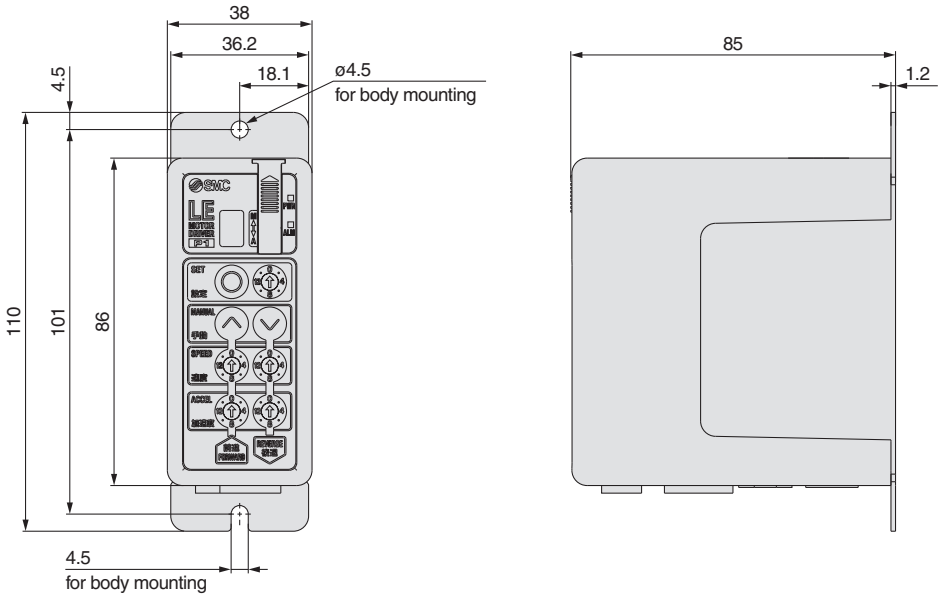
38
36.2
18.1
ø4.5
for body mounting
4.5
110
101
86
4.5
for body mounting
85
1.2

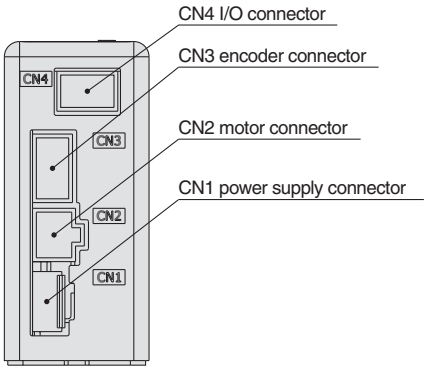
CN4 I/O connector
CN3 encoder connector
CN2 motor connector
CN1 power supply connector
CN4
CN3
CN2
CN1

Wiring Example 1

Power Supply Connector: CN1

* When you connect a CN1 power supply connector, please use the power supply cable (LEC-CK1-1).
* Power supply cable (LEC-CK1-1) is an accessory.

CN1 Power Supply Connector Terminal for LECP1

Terminal name	Cable color	Function	Details
0V	Blue	Common supply (–)	M24V terminal/C24V terminal/BK RLS terminal are common (–).
M24V	White	Motor power supply (+)	Motor power supply (+) supplied to the controller
C24V	Brown	Control power supply (+)	Control power supply (+) supplied to the controller
BK RLS	Black	Lock release (+)	Input (+) for releasing the lock

Power supply cable for LECP1 (LEC-CK1-1)

Wiring Example 2

Parallel I/O Connector: CN4

* When you connect a PLC, etc., to the CN4 parallel I/O connector, please use the I/O cable (LEC-CK4-□).
* The wiring should be changed depending on the type of the parallel I/O (NPN or PNP).

■ NPN

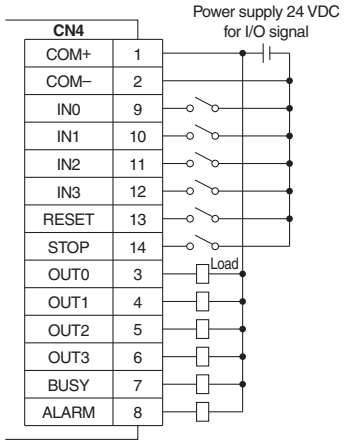

■ PNP

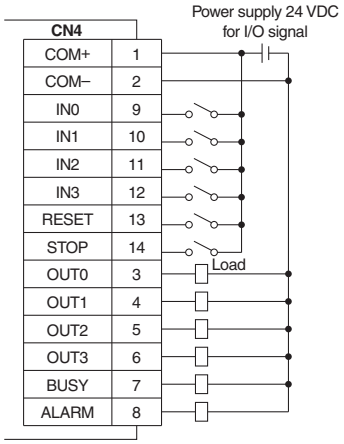

Input Signal

Name	Details
COM+	Connects the power supply 24 V for input/output signal
COM–	Connects the power supply 0 V for input/output signal
IN0 to IN3	• Instruction to drive (input as a combination of IN0 to IN3) • Instruction to return to the origin position (IN0 to IN3 all ON simultaneously) Example - (instruction to drive for position no. 5) IN3: OFF, IN2: ON, IN1: OFF, IN0: ON
RESET	Alarm reset and operation interruption During operation: deceleration stop from position at which signal is input (servo ON maintained) While alarm is active: alarm reset
STOP	Instruction to stop (after maximum deceleration stop, servo OFF)

Output Signal

Name	Details
OUT0 to OUT3	Turns on when the positioning or pushing is completed. (Output is instructed in the combination of OUT0 to 3.) Example - (operation complete for position no. 3) OUT3: OFF, OUT2: OFF, OUT1: ON, OUT0: ON
BUSY	Outputs when the actuator is moving
*ALARM Note)	Not output when alarm is active or servo OFF

Note) Signal of negative-logic circuit (N.C.)

Input Signal [IN0 - IN3] Position Number Chart ○: OFF ●: ON

Position number	IN3	IN2	IN1	IN0
1	○	○	○	●
2	○	○	●	○
3	○	○	●	●
4	○	●	○	○
5	○	●	○	●
6	○	●	●	○
7	○	●	●	●
8	●	○	○	○
9	●	○	○	●
10 (A)	●	○	●	○
11 (B)	●	○	●	●
12 (C)	●	●	○	○
13 (D)	●	●	○	●
14 (E)	●	●	●	○
Retun to origin	●	●	●	●

Output Signal [OUT0 - OUT3] Position Number Chart ○: OFF ●: ON

Position number	OUT3	OUT2	OUT1	OUT0
1	○	○	○	●
2	○	○	●	○
3	○	○	●	●
4	○	●	○	○
5	○	●	○	●
6	○	●	●	○
7	○	●	●	●
8	●	○	○	○
9	●	○	○	●
10 (A)	●	○	●	○
11 (B)	●	○	●	●
12 (C)	●	●	○	○
13 (D)	●	●	○	●
14 (E)	●	●	●	○
Retun to origin	●	●	●	●

Signal Timing

(1) Return to Origin

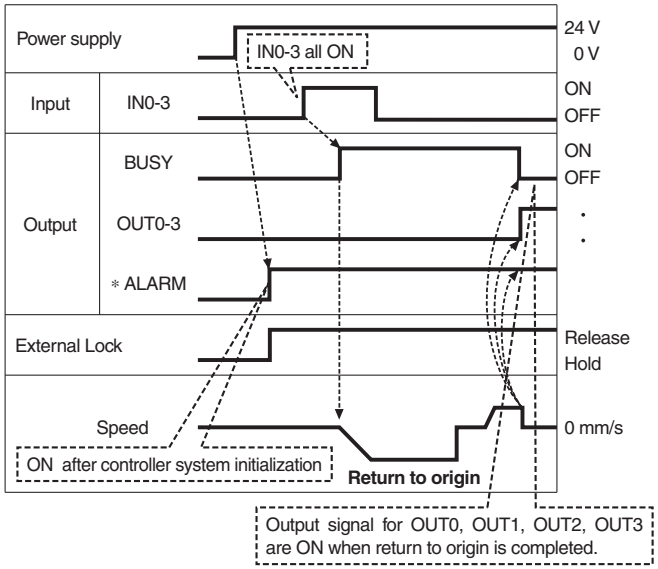

"∗ALARM" is expressed as negative-logic circuit.

(2) Positioning Operation

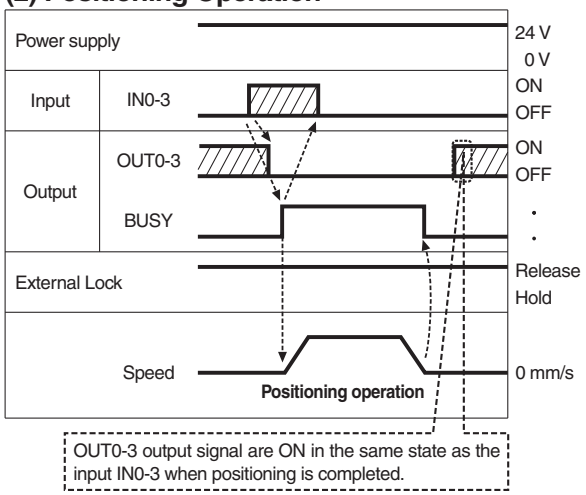

(3) Cut-off Stop (Reset Stop)

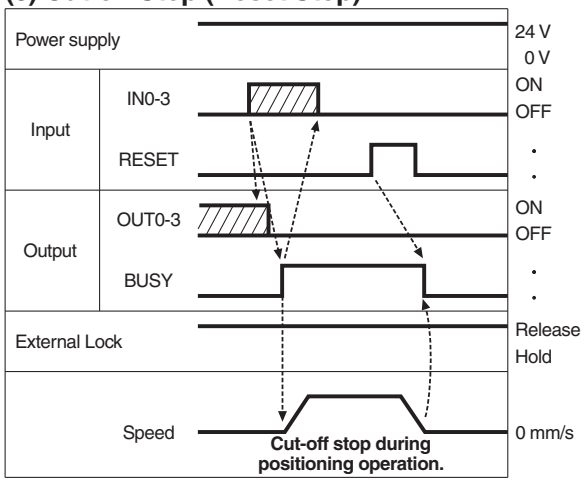

(4) Stop by the STOP Signal

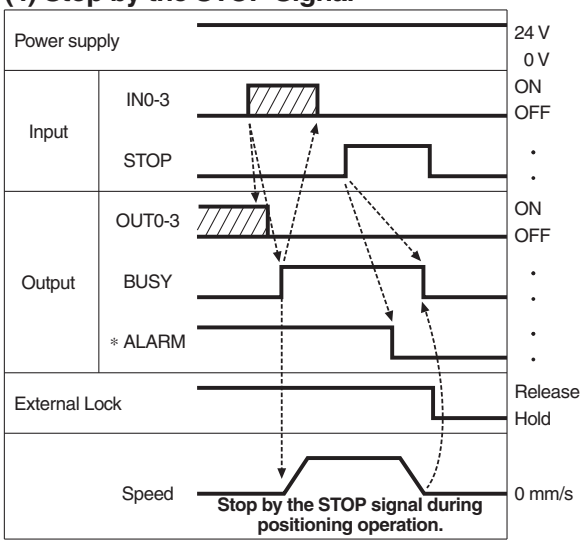

(5) Alarm Reset

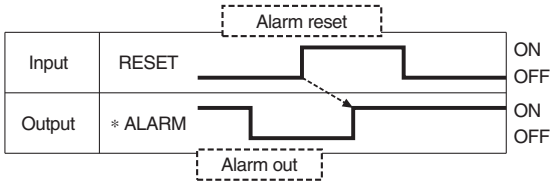

"∗ALARM" is expressed as negative-logic circuit.

Options: Actuator Cable

[Robotic cable, standard cable for step motor (servo/24 VDC)]

LE – CP – 1 – ☐

Cable length(L)[m]

1	1.5
3	3
5	5
8	8*
A	10*
B	15*
C	20*

* Produced upon receipt of order (Robotic cable only)

Cable type

Nil	Robotic cable (Flexible cable)
S	Standard cable

LE-CP-$\begin{smallmatrix}1\\3\\5\end{smallmatrix}$/Cable length: 1.5 m, 3 m, 5 m

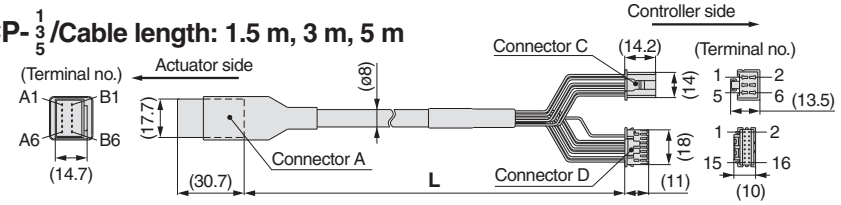

LE-CP-$\begin{smallmatrix}8\\A\end{smallmatrix}\begin{smallmatrix}B\\C\end{smallmatrix}$/Cable length: 8 m, 10 m, 15 m, 20 m
(* Produced upon receipt of order)

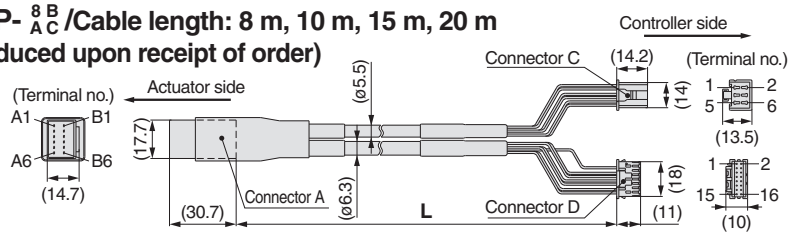

Signal	Connector A terminal no.	Cable color	Connector C terminal no.
A	B-1	Brown	2
$\overline{A}$	A-1	Red	1
B	B-2	Orange	6
$\overline{B}$	A-2	Yellow	5
COM-A/COM	B-3	Green	3
COM-B/–	A-3	Blue	4
		Shield	
Vcc	B-4	Brown	12
GND	A-4	Black	13
$\overline{A}$	B-5	Red	7
A	A-5	Black	6
$\overline{B}$	B-6	Orange	9
B	A-6	Black	8
		—	3

[Robotic cable, standard cable with lock and sensor for step motor (servo/24 VDC)]

LE – CP – 1 – B – ☐

Cable length(L)[m]

1	1.5
3	3
5	5
8	8*
A	10*
B	15*
C	20*

* Produced upon receipt of order (Robotic cable only)

With lock and sensor

Cable type

Nil	Robotic cable (Flexible cable)
S	Standard cable

LE-CP-$\begin{smallmatrix}1\\3\\5\end{smallmatrix}$/Cable length: 1.5 m, 3 m, 5 m

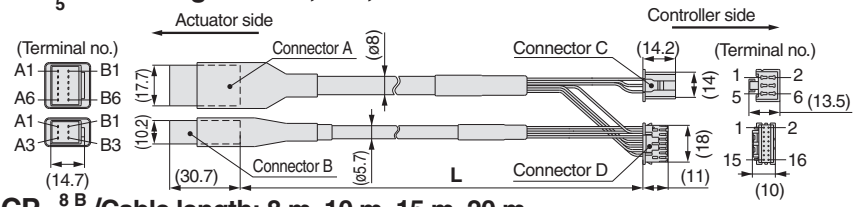

LE-CP-$\begin{smallmatrix}8\\A\end{smallmatrix}\begin{smallmatrix}B\\C\end{smallmatrix}$/Cable length: 8 m, 10 m, 15 m, 20 m
(* Produced upon receipt of order)

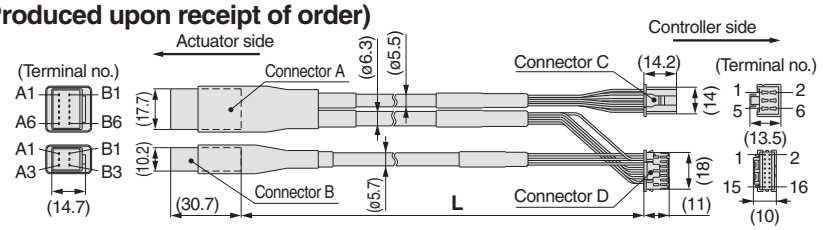

Signal	Connector A terminal no.	Cable color	Connector C terminal no.
A	B-1	Brown	2
$\overline{A}$	A-1	Red	1
B	B-2	Orange	6
$\overline{B}$	A-2	Yellow	5
COM-A/COM	B-3	Green	3
COM-B/–	A-3	Blue	4
		Shield	
Vcc	B-4	Brown	12
GND	A-4	Black	13
$\overline{A}$	B-5	Red	7
A	A-5	Black	6
$\overline{B}$	B-6	Orange	9
B	A-6	Black	8
		—	3

Signal	Connector B terminal no.		
Lock (+)	B-1	Red	4
Lock (–)	A-1	Black	5
Sensor (+) Note)	B-3	Brown	1
Sensor (–) Note)	A-3	Blue	2

Note) This is not used for the LEL series.

Options

[Power supply cable]

LEC−CK1−1

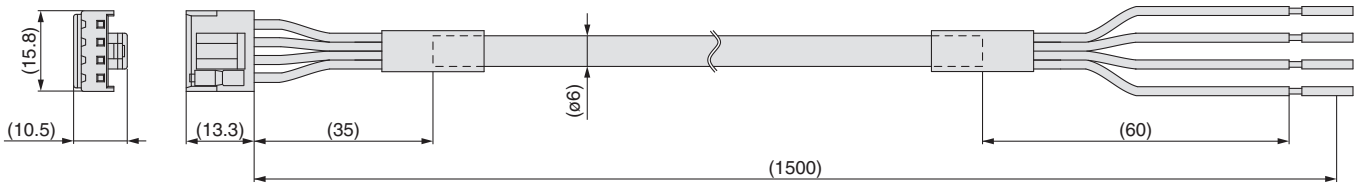

Terminal name	Covered color	Function
0 V	Blue	Common supply (–)
M24 V	White	Motor power supply (+)
C24 V	Brown	Control power supply (+)
BK RLS	Black	Lock release (+)

∗ Conductor size: AWG20

[I/O cable]

LEC−CK4−□

Cable length(L)[m]

1	1.5
3	3
5	5

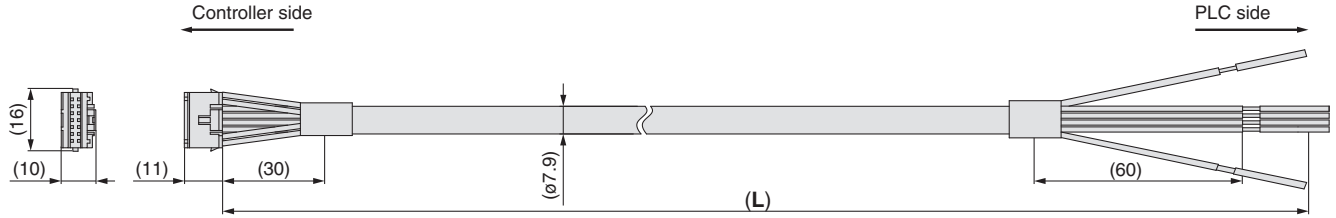

Terminal no.	Insulation color	Dot mark	Dot color	Function
1	Light brown	■	Black	COM +
2	Light brown	■	Red	COM −
3	Yellow	■	Black	OUT0
4	Yellow	■	Red	OUT1
5	Light green	■	Black	OUT2
6	Light green	■	Red	OUT3
7	Gray	■	Black	BUSY
8	Gray	■	Red	ALARM
9	White	■	Black	IN0
10	White	■	Red	IN1
11	Light brown	■ ■	Black	IN2
12	Light brown	■ ■	Red	IN3
13	Yellow	■ ■	Black	RESET
14	Yellow	■ ■	Red	STOP

∗ Conductor size: AWG26

∗ Parallel I/O signal is valid in auto mode. While the test function operates at manual mode, only the output is valid.

⚠ Safety Instructions

These safety instructions are intended to prevent hazardous situations and/or equipment damage. These instructions indicate the level of potential hazard with the labels of **"Caution," "Warning"** or **"Danger."** They are all important notes for safety and must be followed in addition to International Standards (ISO/IEC)*1), and other safety regulations.

⚠ Caution: **Caution** indicates a hazard with a low level of risk which, if not avoided, could result in minor or moderate injury.

⚠ Warning: **Warning** indicates a hazard with a medium level of risk which, if not avoided, could result in death or serious injury.

⚠ Danger : **Danger** indicates a hazard with a high level of risk which, if not avoided, will result in death or serious injury.

*1) ISO 4414: Pneumatic fluid power – General rules relating to systems.
ISO 4413: Hydraulic fluid power – General rules relating to systems.
IEC 60204-1: Safety of machinery – Electrical equipment of machines.
(Part 1: General requirements)
ISO 10218-1: Manipulating industrial robots - Safety.
etc.

⚠ Warning

1. The compatibility of the product is the responsibility of the person who designs the equipment or decides its specifications.
Since the product specified here is used under various operating conditions, its compatibility with specific equipment must be decided by the person who designs the equipment or decides its specifications based on necessary analysis and test results. The expected performance and safety assurance of the equipment will be the responsibility of the person who has determined its compatibility with the product. This person should also continuously review all specifications of the product referring to its latest catalog information, with a view to giving due consideration to any possibility of equipment failure when configuring the equipment.

2. Only personnel with appropriate training should operate machinery and equipment.
The product specified here may become unsafe if handled incorrectly. The assembly, operation and maintenance of machines or equipment including our products must be performed by an operator who is appropriately trained and experienced.

3. Do not service or attempt to remove product and machinery/equipment until safety is confirmed.
1. The inspection and maintenance of machinery/equipment should only be performed after measures to prevent falling or runaway of the driven objects have been confirmed.
2. When the product is to be removed, confirm that the safety measures as mentioned above are implemented and the power from any appropriate source is cut, and read and understand the specific product precautions of all relevant products carefully.
3. Before machinery/equipment is restarted, take measures to prevent unexpected operation and malfunction.

4. Contact SMC beforehand and take special consideration of safety measures if the product is to be used in any of the following conditions.
1. Conditions and environments outside of the given specifications, or use outdoors or in a place exposed to direct sunlight.
2. Installation on equipment in conjunction with atomic energy, railways, air navigation, space, shipping, vehicles, military, medical treatment, combustion and recreation, or equipment in contact with food and beverages, emergency stop circuits, clutch and brake circuits in press applications, safety equipment or other applications unsuitable for the standard specifications described in the product catalog.
3. An application which could have negative effects on people, property, or animals requiring special safety analysis.
4. Use in an interlock circuit, which requires the provision of double interlock for possible failure by using a mechanical protective function, and periodical checks to confirm proper operation.

⚠ Caution

1. The product is provided for use in manufacturing industries.
The product herein described is basically provided for peaceful use in manufacturing industries.
If considering using the product in other industries, consult SMC beforehand and exchange specifications or a contract if necessary.
If anything is unclear, contact your nearest sales branch.

Limited warranty and Disclaimer/ Compliance Requirements

The product used is subject to the following "Limited warranty and Disclaimer" and "Compliance Requirements".
Read and accept them before using the product.

Limited warranty and Disclaimer

1. The warranty period of the product is 1 year in service or 1.5 years after the product is delivered.*2)
Also, the product may have specified durability, running distance or replacement parts. Please consult your nearest sales branch.
2. For any failure or damage reported within the warranty period which is clearly our responsibility, a replacement product or necessary parts will be provided.
This limited warranty applies only to our product independently, and not to any other damage incurred due to the failure of the product.
3. Prior to using SMC products, please read and understand the warranty terms and disclaimers noted in the specified catalog for the particular products.

***2) Vacuum pads are excluded from this 1 year warranty.**
A vacuum pad is a consumable part, so it is warranted for a year after it is delivered.
Also, even within the warranty period, the wear of a product due to the use of the vacuum pad or failure due to the deterioration of rubber material are not covered by the limited warranty.

Compliance Requirements

1. The use of SMC products with production equipment for the manufacture of weapons of mass destruction (WMD) or any other weapon is strictly prohibited.
2. The exports of SMC products or technology from one country to another are governed by the relevant security laws and regulations of the countries involved in the transaction. Prior to the shipment of a SMC product to another country, assure that all local rules governing that export are known and followed.

Controller

Step data input type ····· **Page 25**

Step Motor
(Servo/24 VDC)

Series LECP6

Programless type ····· **Page 35**

Step Motor
(Servo/24 VDC)

Series LECP1

Controller (Step data input type)
Step Motor (Servo/24 VDC)
Series LECP6

How to Order

LE C P 6 N □ □ – □

Controller

Compatible motor

P	Step motor (Servo/24 VDC)

Number of step data (Points)

6	64

Parallel I/O type

N	NPN
P	PNP

I/O cable length [m]

Nil	Without cable
1	1.5
3	3
5	5

Option

Nil	Screw mounting
D Note)	DIN rail mounting

Note) DIN rail is not included. Order it separately.

Actuator part number

(Except cable specifications and actuator options)
Example: Enter "LEPY10K-50" for the LEPY10K-50U-R16NI.

∗ When controller equipped type (-□6N□/-□6P□) is selected when ordering the LE series, you do not need to order this controller.

The controller is sold as single unit after the compatible actuator is set.

Confirm that the combination of the controller and the actuator is correct.

<Check the following before use.>
① Check the actuator label for model number. This matches the controller.
② Check Parallel I/O configuration matches (NPN or PNP).

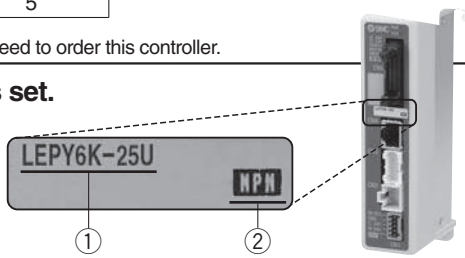

∗ Refer to the operation manual for using the products. Please download it via our website, http://www.smcworld.com

Specifications

Basic Specifications

Item	Specifications
Compatible motor	Step motor (Servo/24 VDC)
Power supply Note 1)	Power voltage: 24 VDC ±10% Current consumption: 3 A (Peak 5 A) Note 2) [Including motor drive power, control power, stop, lock release]
Parallel input	11 inputs (Photo-coupler isolation)
Parallel output	13 outputs (Photo-coupler isolation)
Compatible encoder	Incremental A/B phase (800 pulse/rotation)
Serial communication	RS485 (Modbus protocol compliant)
Memory	EEPROM
LED indicator	LED (Green/Red) one of each
Lock control	Forced-lock release terminal Note 3)
Cable length [m]	I/O cable: 5 or less Actuator cable: 20 or less
Cooling system	Natural air cooling
Operating temperature range	32 to 104°F (0 to 40°C) (No freezing)
Operating humidity range [%RH]	90 or less (No condensation)
Storage temperature range	14 to 140°F (–10 to 60°C) (No freezing)
Storage humidity range [%RH]	90 or less (No condensation)
Insulation resistance [MΩ]	Between the housing (radiation fin) and SG terminal 50 (500 VDC)
Weight [g]	5.3 oz (150 g) (Screw mounting) 6.0oz (170 g) (DIN rail mounting)

Note 1) Do not use the power supply of "inrush current prevention type" for the controller power supply.
Note 2) The power consumption changes depending on the actuator model. Refer to the specifications of actuator for more details.
Note 3) Applicable to non-magnetizing lock.

How to Mount

a) Screw mounting (LECP6□□-□)
(Installation with two M4 screws)

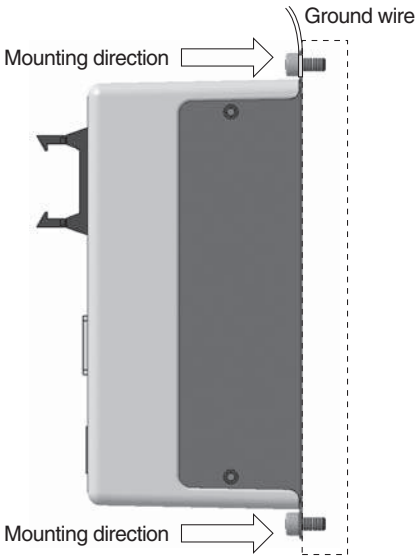

b) DIN rail mounting (LECP6□□D-□)
(Installation with the DIN rail)

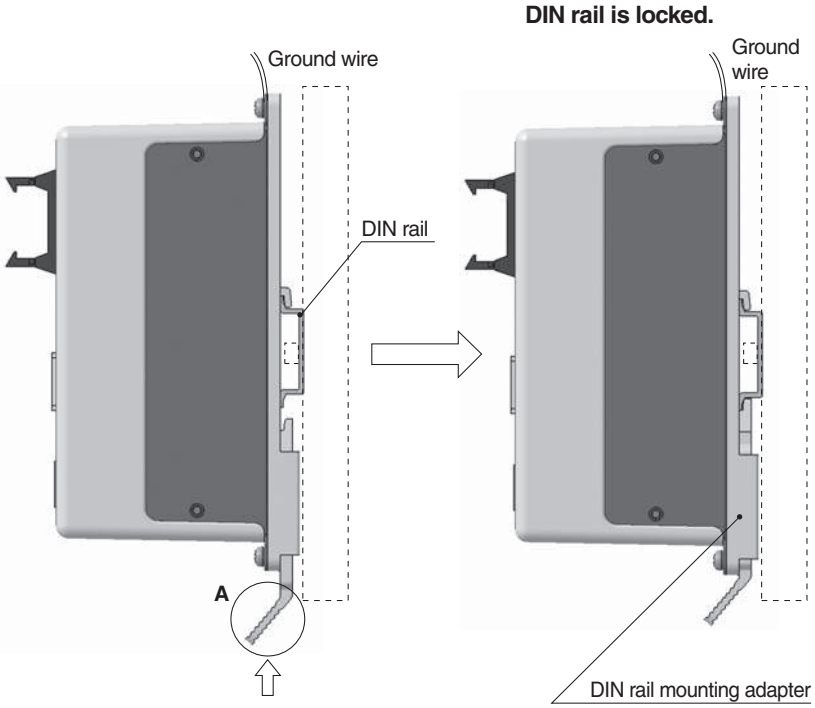

Hook the controller on the DIN rail and press the lever of section **A** in the arrow direction to lock it.

DIN rail
AXT100-DR-□

∗ For □, enter a number from the "No." line in the table below.
Refer to the dimensions on page 27 for the mounting dimensions.

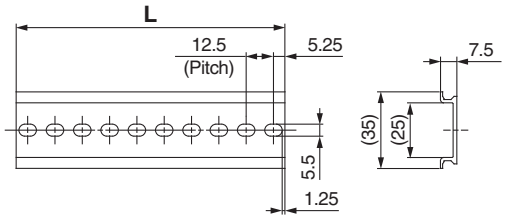

L Dimension [mm]

No.	1	2	3	4	5	6	7	8	9	10	11	12	13	14	15	16	17	18	19	20
L	23	35.5	48	60.5	73	85.5	98	110.5	123	135.5	148	160.5	173	185.5	198	210.5	223	235.5	248	260.5

No.	21	22	23	24	25	26	27	28	29	30	31	32	33	34	35	36	37	38	39	40
L	273	285.5	298	310.5	323	335.5	348	360.5	373	385.5	398	410.5	423	435.5	448	460.5	473	485.5	498	510.5

DIN rail mounting adapter
LEC-D0 (with 2 mounting screws)

This should be used when the DIN rail mounting adapter is mounted onto the screw mounting type controller afterwards.

Dimensions

a) Screw mounting (LECP6□□-□)

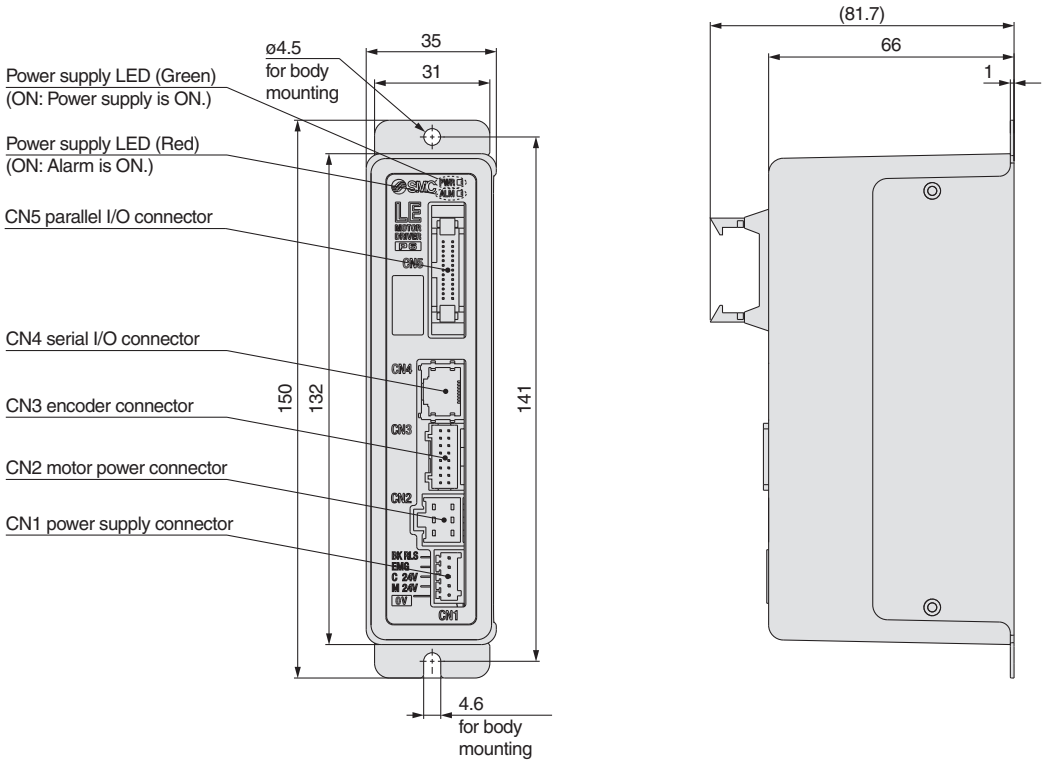

b) DIN rail mounting (LECP6□□D-□)

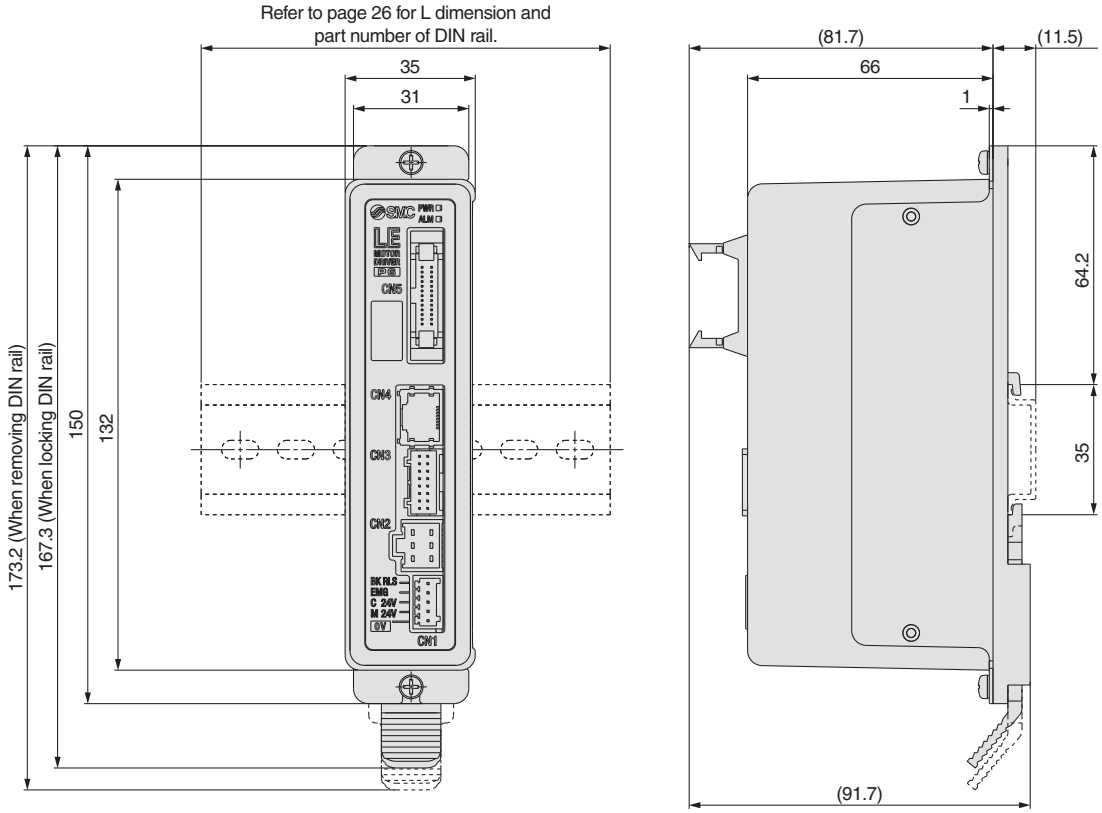

Wiring Example 1

Power Supply Connector: CN1

∗ Power supply plug is an accessory.

CN1 Power Supply Connector Terminal for LECP6 (PHOENIX CONTACT FK-MC0.5/5-ST-2.5)

Terminal name	Function	Details
0V	Common supply (–)	M24V terminal/C24V terminal/EMG terminal/BK RLS terminal are common (–).
M24V	Motor power supply (+)	Motor power supply (+) supplied to the controller
C24V	Control power supply (+)	Control power supply (+) supplied to the controller
EMG	Stop (+)	Input (+) for releasing the stop
BK RLS	Lock release (+)	Input (+) for releasing the lock

Power supply plug for LECP6

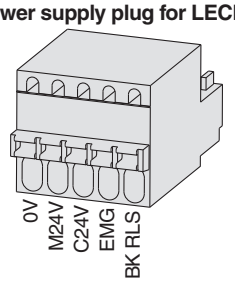

Wiring Example 2

Parallel I/O Connector: CN5

∗ When you connect a PLC, etc., to the CN5 parallel I/O connector, please use the I/O cable (LEC-CN5-□).
∗ The wiring should be changed depending on the type of the parallel I/O (NPN or PNP).

Wiring diagram

LECP6N□□-□ (NPN)

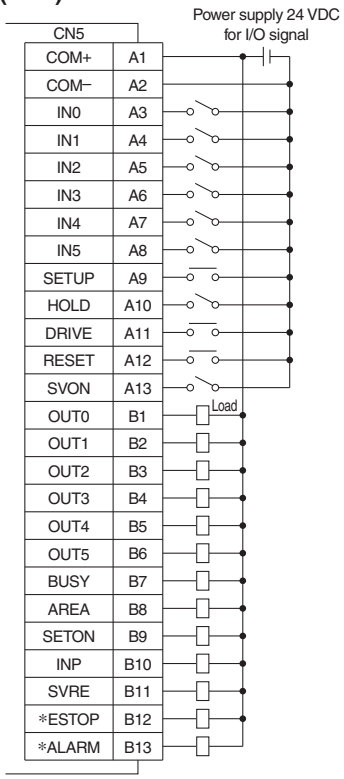

LECP6P□□-□ (PNP)

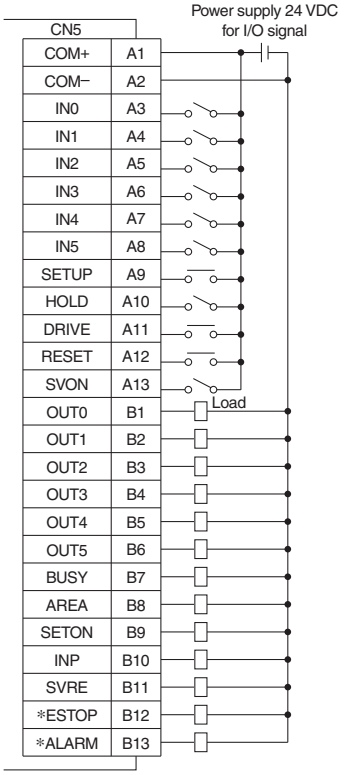

Input Signal

Name	Details
COM+	Connects the power supply 24 V for input/output signal
COM–	Connects the power supply 0 V for input/output signal
IN0 to IN5	Step data specified Bit No. (Input is instructed in the combination of IN0 to 5.)
SETUP	Instruction to return to the original position
HOLD	Operation is temporarily stopped
DRIVE	Instruction to drive
RESET	Alarm reset and operation interruption
SVON	Servo ON instruction

Output Signal

Name	Details
OUT0 to OUT5	Outputs the step data no. during operation
BUSY	Outputs when the actuator is moving
AREA	Outputs within the step data area output setting range
SETON	Outputs when returning to the original position
INP	Outputs when target position or target force is reached (Turns on when the positioning or pushing is completed.)
SVRE	Outputs when servo is on
∗ESTOP Note)	Not output when EMG stop is instructed
∗ALARM Note)	Not output when alarm is generated

Note) Signal of negative-logic circuit (N.C.)

Step Data Setting

1. Step data setting for positioning

In this setting, the actuator moves toward and stops at the target position. The following diagram shows the setting items and operation. The setting items and set values for this operation are stated below.

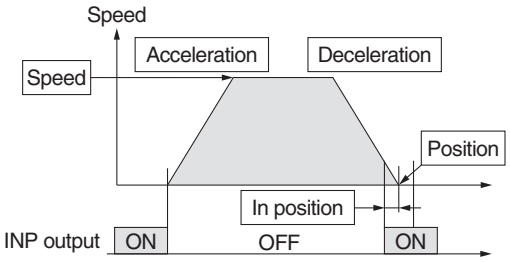

◎: Need to be set.
○: Need to be adjusted as required.
—: Setting is not required.

Step Data (Positioning)

Necessity	Item	Details
◎	Movement method	When the absolute position is required, set Absolute. When the relative position is required, set Relative.
◎	Speed	Transfer speed to the target position
◎	Position	Target position
◎	Acceleration	Parameter which defines how rapidly the actuator reaches the speed set. The higher the set value, the faster it reaches the speed set.
◎	Deceleration	Parameter which defines how rapidly the actuator comes to stop. The higher the set value, the quicker it stops.
◎	Pushing force	Set 0. (If values 1 to 100 are set, the operation will be changed to the pushing operation.)
—	Trigger LV	Setting is not required.
—	Pushing speed	Setting is not required.
○	Positioning force	Max. torque during the positioning operation (No specific change is required.)
○	Area 1, Area 2	Condition that turns on the AREA output signal.
○	In position	Condition that turns on the INP output signal. When the actuator enters the range of [in position], the INP output signal turns on. (It is unnecessary to change this from the initial value.) When it is necessary to output the arrival signal before the operation is completed, make the value larger.

2. Step data setting for pushing

The actuator moves toward the pushing start position, and when it reaches that position, it starts pushing with less than the set force. The following diagram shows the setting items and operation. The setting items and set values for this operation are stated below.

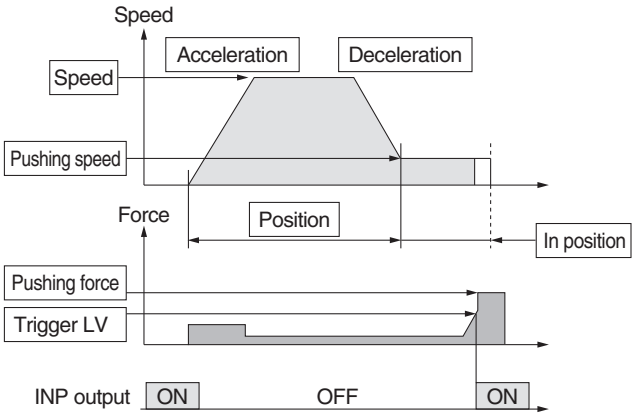

◎: Need to be set.
○: Need to be adjusted as required.

Step Data (Pushing)

Necessity	Item	Details
◎	Movement method	When the absolute position is required, set Absolute. When the relative position is required, set Relative.
◎	Speed	Transfer speed to the pushing start position
◎	Position	Pushing start position
◎	Acceleration	Parameter which defines how rapidly the actuator reaches the speed set. The higher the set value, the faster it reaches the speed set.
◎	Deceleration	Parameter which defines how rapidly the actuator comes to stop. The higher the set value, the quicker it stops.
◎	Pushing force	Pushing force ratio is defined. The setting range differs depending on the electric actuator type. Refer to the operation manual for the electric actuator.
◎	Trigger LV	Condition that turns on the INP output signal. The INP output signal is turned on when the generated force exceeds the value. Threshold level should be less than the pushing force.
○	Pushing speed	Pushing speed When the speed is set fast, the electric actuator and work pieces might be damaged due to the impact when they hit the end, so this set value should be smaller. Refer to the operation manual of the electric actuator.
○	Positioning force	Max. torque during the positioning operation (No specific change is required.)
○	Area 1, Area 2	Condition that turns on the AREA output signal.
◎	In position	Transfer distance during pushing. If the transferred distance exceeds the setting, it stops even if it is not pushing. If the transfer distance is exceeded, the INP output signal will not be turned on.

Signal Timing

Return to Origin

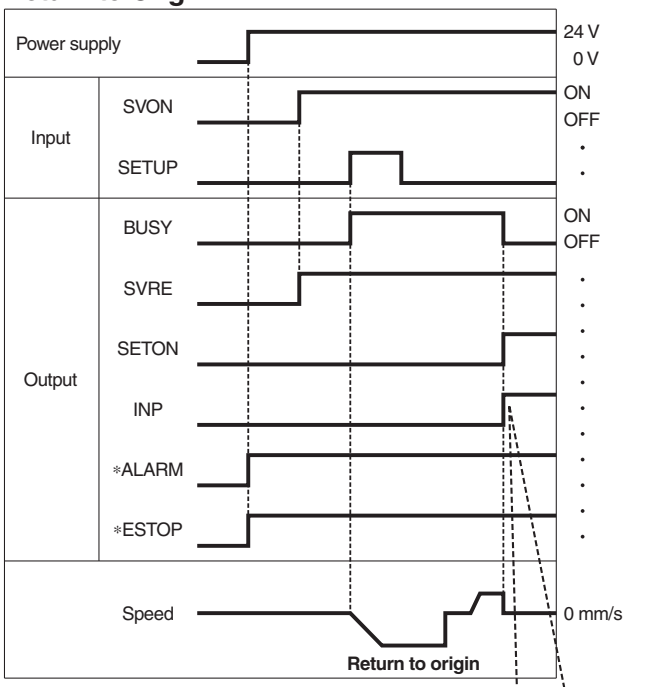

"∗ALARM" and "∗ESTOP" are expressed as negative-logic circuit.

Positioning Operation

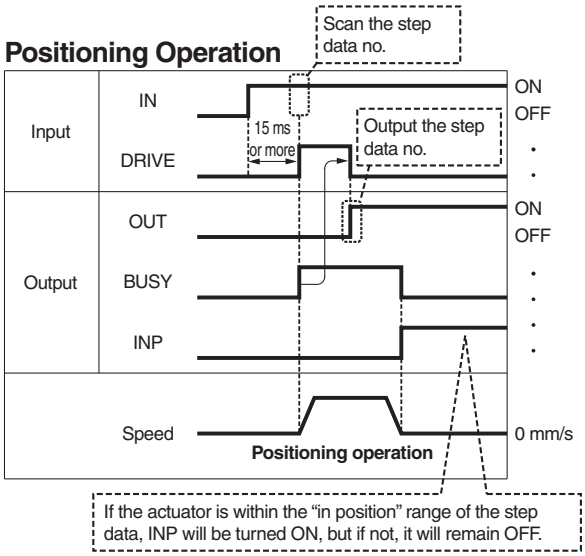

Pushing Operation

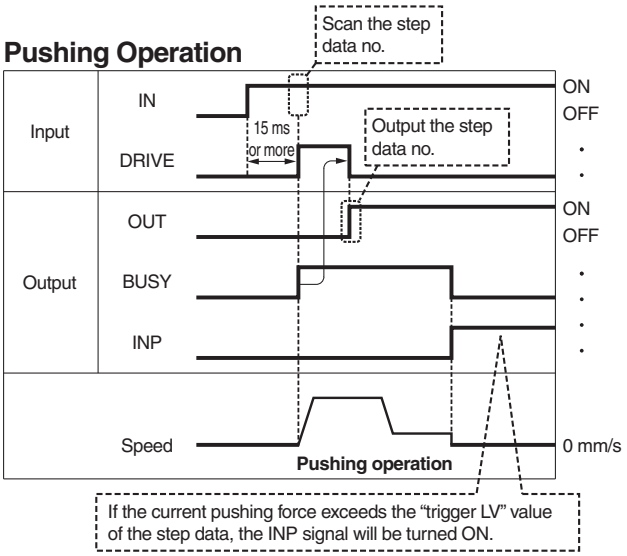

∗ "OUT" is output when "DRIVE" is changed from ON to OFF.
(When power supply is applied, "DRIVE" or "RESET" is turned ON or "∗ESTOP" is turned OFF, all of the "OUT" outputs are turned OFF.)

HOLD

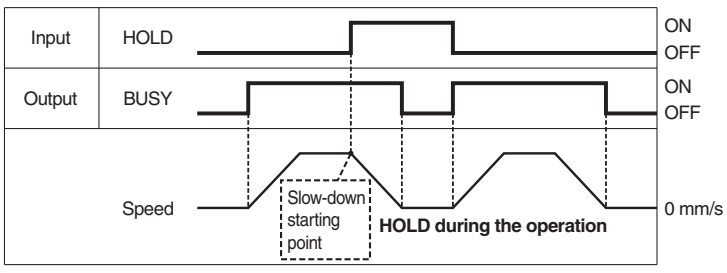

∗ When the actuator is in the positioning range in the pushing operation, it does not stop even if HOLD signal is input.

Reset

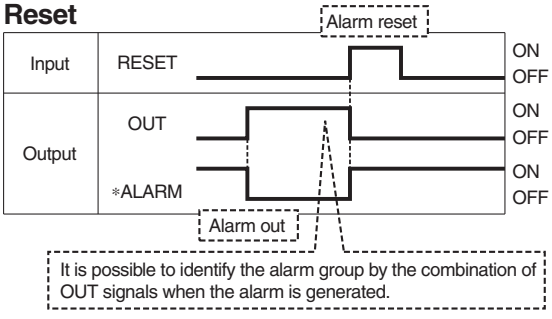

"∗ALARM" is expressed as negative-logic circuit.

Options: Actuator Cable, I/O Cable

Actuator cable

[Robotic cable, standard cable for step motor (servo/24 VDC)]

LE − CP − 1 − ☐

Cable length(L)[m]

1	1.5
3	3
5	5
8	8*
A	10*
B	15*
C	20*

* Produced upon receipt of order (Robotic cable only)

Cable type

Nil	Robotic cable (Flexible cable)
S	Standard cable

LE-CP-1/3/5 /Cable length: 1.5 m, 3 m, 5 m

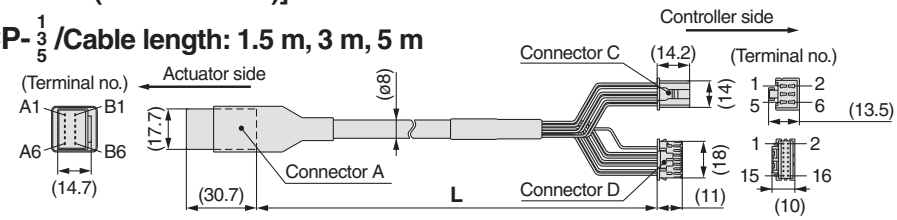

LE-CP-8/A/B/C /Cable length: 8 m, 10 m, 15 m, 20 m
(* Produced upon receipt of order)

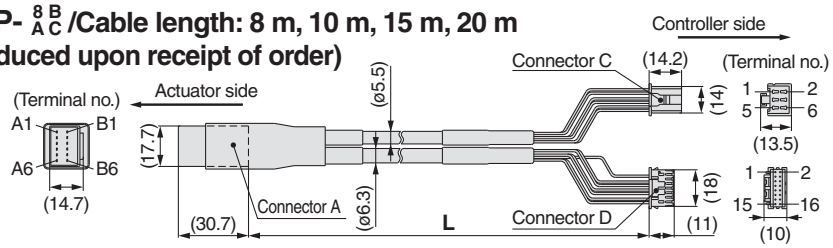

Signal	Connector A terminal no.	Cable color	Connector C terminal no.
A	B-1	Brown	2
$\overline{A}$	A-1	Red	1
B	B-2	Orange	6
$\overline{B}$	A-2	Yellow	5
COM-A/COM	B-3	Green	3
COM-B/—	A-3	Blue	4
		Shield	
Vcc	B-4	Brown	12
GND	A-4	Black	13
$\overline{A}$	B-5	Red	7
A	A-5	Black	6
$\overline{B}$	B-6	Orange	9
B	A-6	Black	8
		—	3

Cable color	Connector D terminal no.
Brown	12
Black	13
Red	7
Black	6
Orange	9
Black	8
—	3

I/O cable

LEC − CN5 − 1

Cable length(L)[m]

1	1.5
3	3
5	5

* Conductor size: AWG28

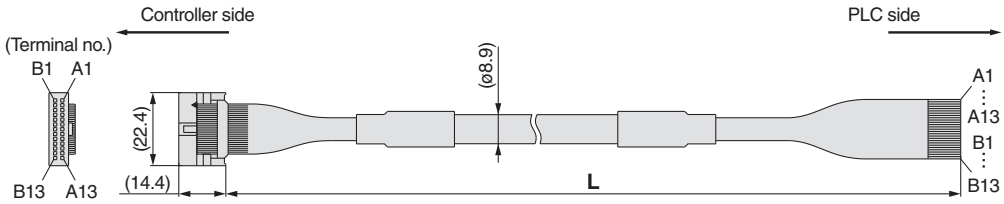

Connector pin no.	Insulation color	Dot mark	Dot color
A1	Light brown	■	Black
A2	Light brown	■	Red
A3	Yellow	■	Black
A4	Yellow	■	Red
A5	Light green	■	Black
A6	Light green	■	Red
A7	Gray	■	Black
A8	Gray	■	Red
A9	White	■	Black
A10	White	■	Red
A11	Light brown	■ ■	Black
A12	Light brown	■ ■	Red
A13	Yellow	■ ■	Black

Connector pin no.	Insulation color	Dot mark	Dot color
B1	Yellow	■ ■	Red
B2	Light green	■ ■	Black
B3	Light green	■ ■	Red
B4	Gray	■ ■	Black
B5	Gray	■ ■	Red
B6	White	■ ■	Black
B7	White	■ ■	Red
B8	Light brown	■ ■ ■	Black
B9	Light brown	■ ■ ■	Red
B10	Yellow	■ ■ ■	Black
B11	Yellow	■ ■ ■	Red
B12	Light green	■ ■ ■	Black
B13	Light green	■ ■ ■	Red
—	Shield		

Controller Setting Kit/LEC-W1

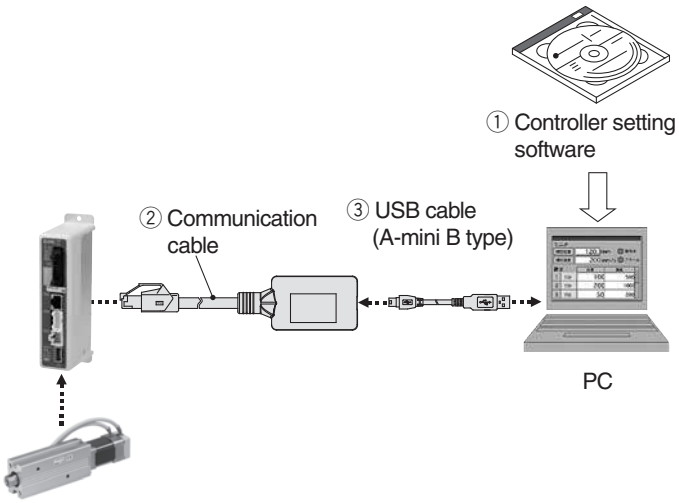

How to Order

LEC – W1

Controller setting kit
(Japanese and English are available.)

Contents

① **Controller setting software (CD-ROM)**
② **Communication cable**
③ **USB cable**
(Cable between the PC and the conversion unit)

Hardware Requirements

PC/AT compatible machine installed with Windows XP and equipped with USB1.1 or USB2.0 ports.

∗ Windows® and Windows XP® are registered trademarks of Microsoft Corporation.

Screen Example

Easy mode screen example

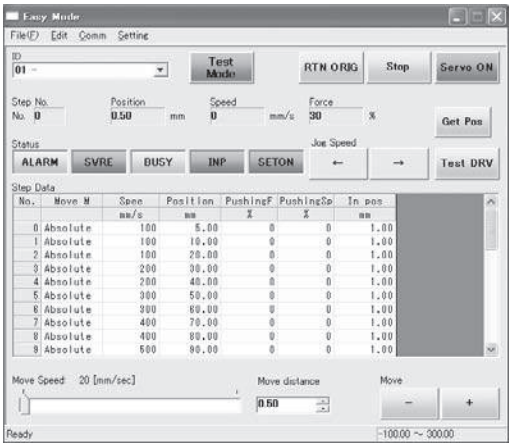

Easy operation and simple setting

- Allowing to set and display actuator step data such as position, speed, force, etc.
- Setting of step data and testing of the drive can be performed on the same page.
- Can be used to jog and move at a constant rate.

Normal mode screen example

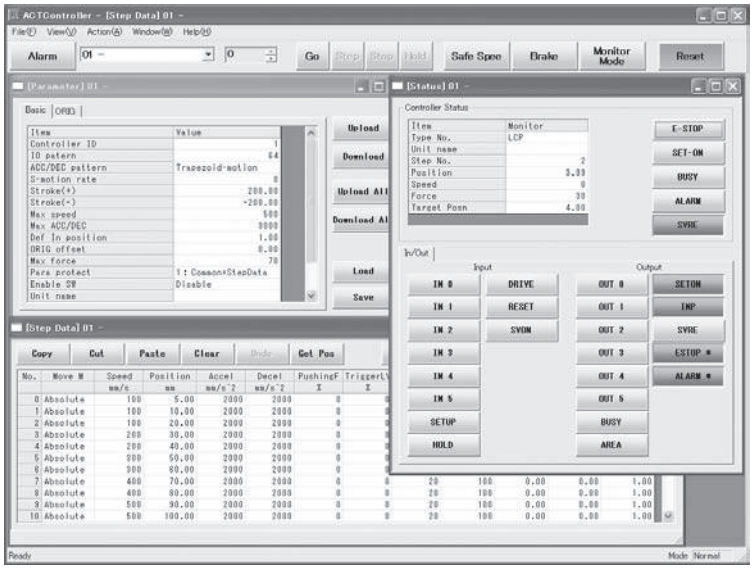

Detailed setting

- Step data can be set in detail.
- Signals and terminal status can be monitored.
- Parameters can be set.
- JOG and constant rate movement, return to origin, test operation and testing of forced output can be performed.

Series LEC
Teaching Box/LEC-T1

How to Order

LEC – T1 – 3 J G

Teaching box

Cable length [m]

3	3

Initial language

J	Japanese
E	English

Stop switch

G	Equipped with stop switch

Enable switch

Nil	None
S	Equipped with enable switch

∗ Interlock switch for jog and test function

Standard functions
- **Chinese character display**
- **Stop switch is provided.**

Option
- **Enable switch is provided.**

Specifications

Item	Description
Switch	Stop switch, Enable switch (Option)
Cable length [m]	3
Enclosure	IP64 (Except connector)
Operating temperature range	41 to 122°F (5 to 50°C)
Operating humidity range [%RH]	90 or less (No condensation)
Weight	12.3 oz (350 g) (Except cable)

Note) CE-compliance
The EMC compliance of the teaching box was tested with the LECP6 series step motor controller (servo/24 VDC) and an applicable actuator.

Easy Mode

Function	Details
Step data	• Setting of step data
Jog	• Jog operation • Return to origin
Test	• 1 step operation • Return to origin
Monitor	• Display of axis and step data no. • Display of two items selected from Position, Speed, Force.
ALM	• Active alarm display • Alarm reset
TB setting	• Reconnection of axis • Setting of easy/normal mode • Setting of step data and selection of items from easy mode monitor

Menu Operations Flowchart

Menu
- Data
- Monitor
- Jog
- Test
- ALM
- TB setting

Data
Step data no.
Setting of two items selected below
(Position, Speed, Force, Acceleration, Deceleration)

Monitor
Display of step no.
Display of two items selected below
(Position, Speed, Force)

Jog
Return to origin
Jog operation

Test
1 step operation

ALM
Active alarm display
Alarm reset

TB setting
Reconnect
Easy/Normal
Set item

Normal Mode

Function	Details
Step data	• Step data setting
Parameter	• Parameters setting
Test	• Jog operation/Constant rate movement • Return to origin • Test drive (Specify a maximum of 5 step data and operate.) • Forced output (Forced signal output, Forced terminal output)
Monitor	• Drive monitor • Output signal monitor • Input signal monitor • Output terminal monitor • Input terminal monitor
ALM	• Active alarm display (Alarm reset) • Alarm log record display
File	• Data saving Save the step data and parameters of the controller which is being used for communication (it is possible to save four files, with one set of step data and parameters defined as one file). • Load to controller Loads the data which is saved in the teaching box to the controller which is being used for communication. • Delete the saved data.
TB setting	• Display setting (Easy/Normal mode) • Language setting (Japanese/English) • Backlight setting • LCD contrast setting • Beep sound setting • Max. connection axis • Distance unit (mm/inch)
Reconnect	• Reconnection of axis

Menu Operations Flowchart

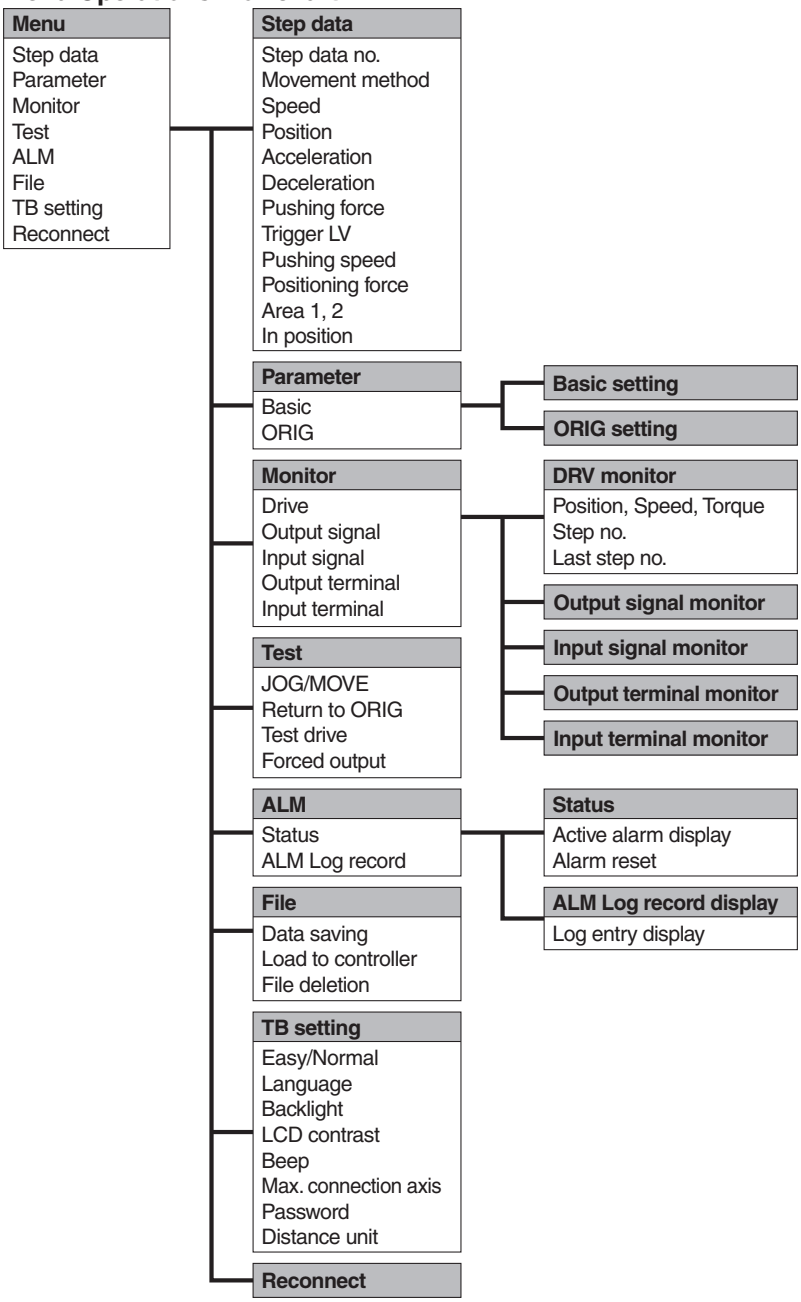

Dimensions

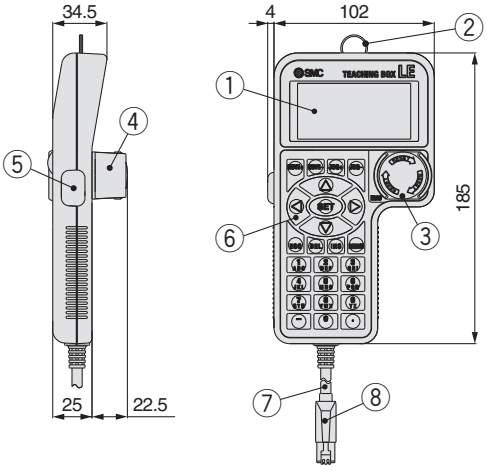

No.	Description	Function
1	**LCD**	A screen of liquid crystal display (with backlight)
2	**Ring**	A ring for hanging the teaching box
3	**Stop switch**	When switch is pushed in, the switch locks and stops. The lock is released when it is turned to the right.
4	**Stop switch guard**	A guard for the stop switch
5	**Enable switch (Option)**	Prevents unintentional operation (unexpected operation) of the jog test function. Other functions such as data change are not covered.
6	**Key switch**	Switch for each input
7	**Cable**	Length: 3 meters
8	**Connector**	A connector connected to CN4 of the controller

Programless Controller
Series LECP1

How to Order

LE C P 1 N 1 – LEPY10-50

Controller

Compatible motor

P	Step motor (Servo/24 VDC)

Number of step data (Points)

1	14 (Programless)

Parallel I/O type

N	NPN
P	PNP

I/O cable length [m]

Nil	Without cable
1	1.5
3	3
5	5

Actuator part number

(Except cable specifications and actuator options)
Example: Enter "LEPY10K-50" for the LEPY10K-50U-R16NI.

∗ **When controller equipped type (-□1N□/-□1P□) is selected when ordering the LE series, you do not need to order this controller.**

The controller is sold as single unit after the compatible actuator is set.

Confirm that the combination of the controller and the actuator is correct.

∗ Refer to the operation manual for using the products. Please download it via our website, http://www.smcworld.com

Specifications

Basic Specifications

Item	Specifications
Compatible motor	Step motor (Servo/24 VDC)
Power supply Note 1)	Power supply voltage: 24 VDC ±10% Max. current consumption: 3 A (Peak 5 A) Note 2) [Including the motor drive power, control power supply, stop, lock release]
Parallel input	6 inputs (Photo-coupler isolation)
Parallel output	6 outputs (Photo-coupler isolation)
Stop points	14 points (Position number 1 to 14(E))
Compatible encoder	Incremental A/B phase (800 pulse/rotation)
Serial communication	RS485 (Modbus protocol compliant)
Memory	EEPROM
LED indicator	LED (Green/Red) one of each
7-segment LED display Note 3)	1 digit, 7-segment display (red) Figures are expressed in hexadecimal ("10" to "15" in decimal number are expressed as "A" to "F")
Lock control	Forced-lock release terminal Note 4)
Cable length [m]	I/O cable: 5 or less Actuator cable: 20 or less
Cooling system	Natural air cooling
Operating temperature range	32 to 104°F (0 to 40°C) (No freezing)
Operating humidity range [%RH]	90 or less (No condensation)
Storage temperature range	14 to 140°F (–10 to 60°C) (No freezing)
Storage humidity range [%RH]	90 or less (No condensation)
Insulation resistance [MΩ]	Between the housing (radiation fin) and SG terminal 50 (500 VDC)
Weight	4.6 oz (130 g)

Note 1) Do not use the power supply of "inrush current prevention type" for the controller input power supply.
Note 2) The power consumption changes depending on the actuator model. Refer to the each actuator's operation manual etc. for details.
Note 3) "10" to "15" in decimal number are displayed as follows in the 7-segment LED.

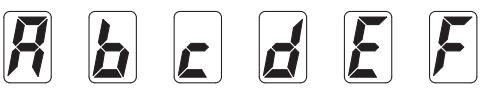

Decimal display	10	11	12	13	14	15
Hexadecimal display	A	b	c	d	E	F

Note 4) Applicable to non-magnetizing lock.

Controller Details

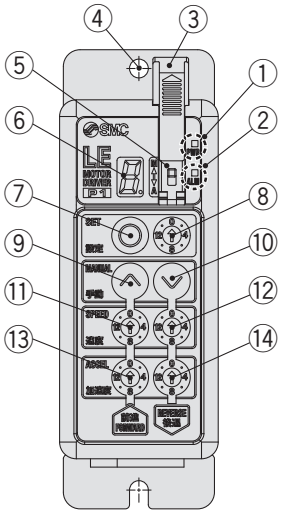

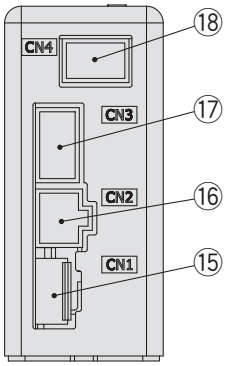

No.	Display	Description	Details
①	**PWR**	Power supply LED	Power supply ON/Servo ON : Green turns on Power supply ON/Servo OFF : Green flashes
②	**ALM**	Alarm LED	With alarm : Red turns on Parameter setting : Red flashes
③	—	Cover	Change and protection of the mode SW (Close the cover after changing SW)
④	—	FG	Frame ground (Tighten the bolt with the nut when mounting the controller. Connect the ground wire.)
⑤	—	Mode swith	Switch the mode between manual and auto.
⑥	—	7-segment LED	Stop position, the value set by ⑧ and alarm information are displayed.
⑦	**SET**	Set button	Decide the settings or drive operation in Manual mode.
⑧	—	Position selecting switch	Assign the position to drive (1 to 14), and the origin position (15).
⑨	**MANUAL**	Manual forward button	Perform forward jog and inching.
⑩		Manual reverse button	Perform reverse jog and inching.
⑪	**SPEED**	Forward speed switch	16 forward speeds are available.
⑫		Reverse speed switch	16 reverse speeds are available.
⑬	**ACCEL**	Forward acceleration switch	16 forward acceleration steps are available.
⑭		Reverse acceleration switch	16 reverse acceleration steps are available.
⑮	**CN1**	Power supply connector	Connect the power supply cable.
⑯	**CN2**	Motor connector	Connect the motor connector.
⑰	**CN3**	Encoder connector	Connect the encoder connector.
⑱	**CN4**	I/O connector	Connect I/O cable.

How to Mount

Controller mounting shown below.

1. Mounting screw (LECP1□□-□)

(Installation with two M4 screws)

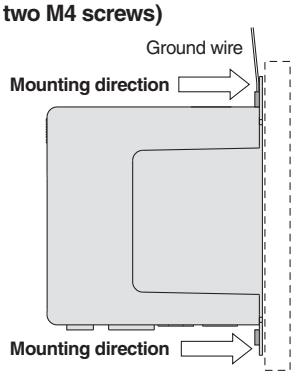

2. Grounding

Tighten the bolt with the nut when mounting the ground wire as shown below.

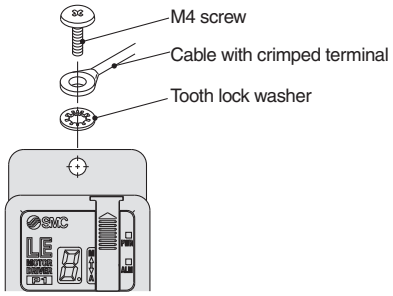

Controller

⚠Caution

- M4 screws, cable with crimping terminal and tooth lock washer are not included. Be sure to carry out grounding earth in order to ensure the noise tolerance.
- Use a watchmaker's screwdriver of the size shown below when changing position switch ⑧ and the set value of the speed/acceleration switch ⑪ to ⑭.

Size
End width **L**: 2.0 to 2.4 [mm]
End thickness **W**: 0.5 to 0.6 [mm]

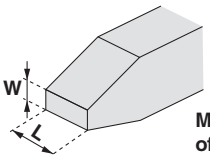

Magnified view of the end of the screwdriver

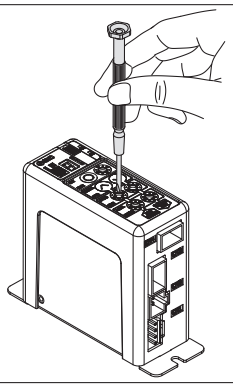

Dimensions

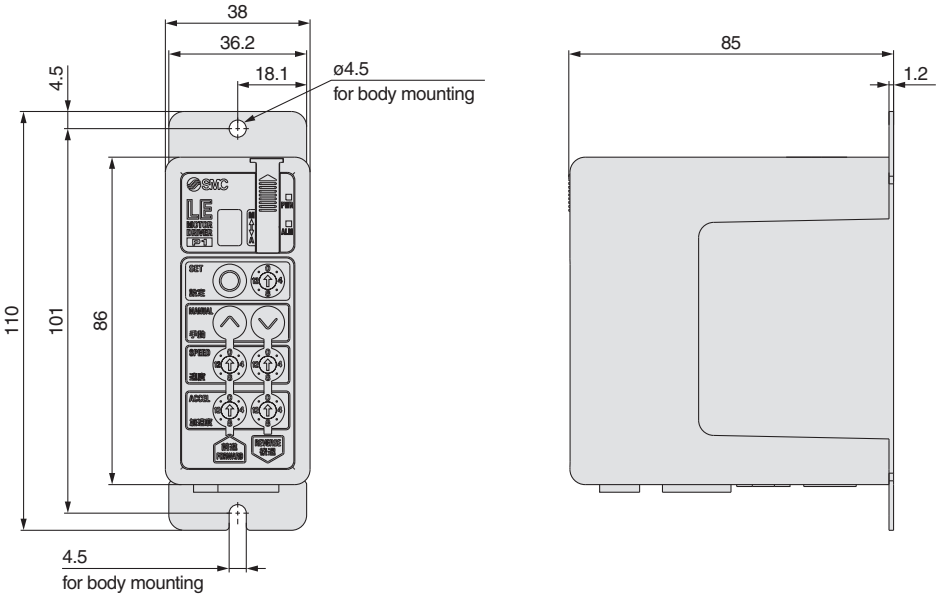
38
36.2
18.1
4.5
ø4.5
for body mounting
110
101
86
4.5
for body mounting
85
1.2

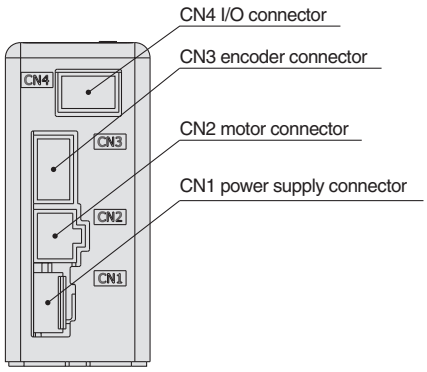
CN4 I/O connector
CN3 encoder connector
CN2 motor connector
CN1 power supply connector
CN4
CN3
CN2
CN1

Wiring Example 1

Power Supply Connector: CN1

* When you connect a CN1 power supply connector, please use the power supply cable (LEC-CK1-1).
* Power supply cable (LEC-CK1-1) is an accessory.

CN1 Power Supply Connector Terminal for LECP1

Terminal name	Cable color	Function	Details
0V	Blue	Common supply (–)	M24V terminal/C24V terminal/BK RLS terminal are common (–).
M24V	White	Motor power supply (+)	Motor power supply (+) supplied to the controller
C24V	Brown	Control power supply (+)	Control power supply (+) supplied to the controller
BK RLS	Black	Lock release (+)	Input (+) for releasing the lock

Power supply cable for LECP1 (LEC-CK1-1)

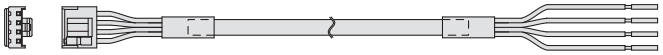

Wiring Example 2

Parallel I/O Connector: CN4

* When you connect a PLC, etc., to the CN4 parallel I/O connector, please use the I/O cable (LEC-CK4-□).
* The wiring should be changed depending on the type of the parallel I/O (NPN or PNP).

■ NPN

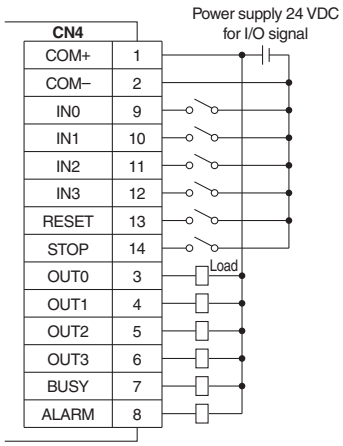

■ PNP

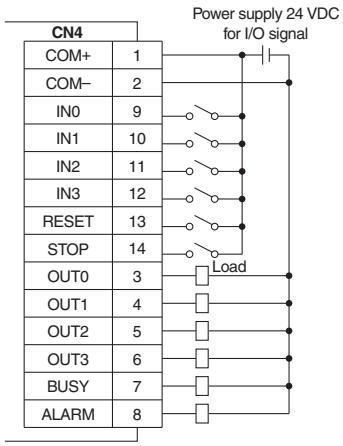

Input Signal

Name	Details
COM+	Connects the power supply 24 V for input/output signal
COM–	Connects the power supply 0 V for input/output signal
IN0 to IN3	• Instruction to drive (input as a combination of IN0 to IN3) • Instruction to return to the origin position (IN0 to IN3 all ON simultaneously) Example - (instruction to drive for position no. 5) IN3: OFF, IN2: ON, IN1: OFF, IN0: ON
RESET	Alarm reset and operation interruption During operation : deceleration stop from position at which signal is input (servo ON maintained) While alarm is active : alarm reset
STOP	Instruction to stop (after maximum deceleration stop, servo OFF)

Output Signal

Name	Details
OUT0 to OUT3	Turns on when the positioning or pushing is completed. (Output is instructed in the combination of OUT0 to 3.) Example - (operation complete for position no. 3) OUT3: OFF, OUT2: OFF, OUT1: ON, OUT0: ON
BUSY	Outputs when the actuator is moving
*ALARM Note)	Not output when alarm is active or servo OFF

Note) Signal of negative-logic circuit (N.C.)

Input Signal [IN0 - IN3] Position Number Chart ○: OFF ●: ON

Position number	IN3	IN2	IN1	IN0
1	○	○	○	●
2	○	○	●	○
3	○	○	●	●
4	○	●	○	○
5	○	●	○	●
6	○	●	●	○
7	○	●	●	●
8	●	○	○	○
9	●	○	○	●
10 (A)	●	○	●	○
11 (B)	●	○	●	●
12 (C)	●	●	○	○
13 (D)	●	●	○	●
14 (E)	●	●	●	○
Retun to origin	●	●	●	●

Output Signal [OUT0 - OUT3] Position Number Chart ○: OFF ●: ON

Position number	OUT3	OUT2	OUT1	OUT0
1	○	○	○	●
2	○	○	●	○
3	○	○	●	●
4	○	●	○	○
5	○	●	○	●
6	○	●	●	○
7	○	●	●	●
8	●	○	○	○
9	●	○	○	●
10 (A)	●	○	●	○
11 (B)	●	○	●	●
12 (C)	●	●	○	○
13 (D)	●	●	○	●
14 (E)	●	●	●	○
Retun to origin	●	●	●	●

Signal Timing

(1) Return to Origin

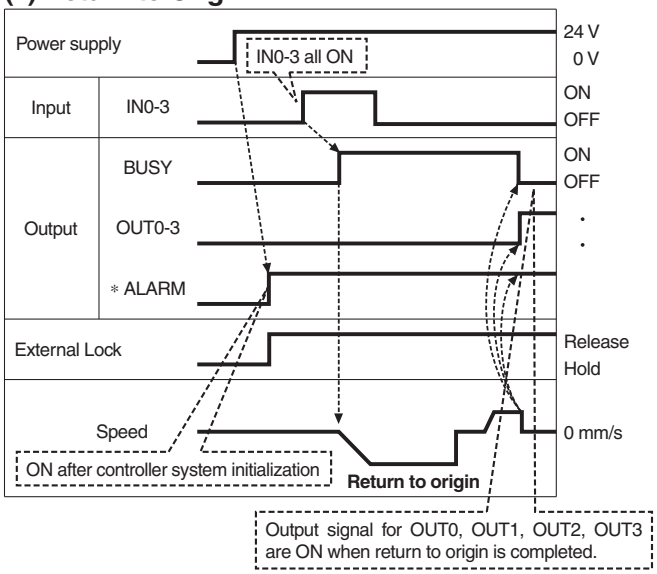

"∗ALARM" is expressed as negative-logic circuit.

(2) Positioning Operation

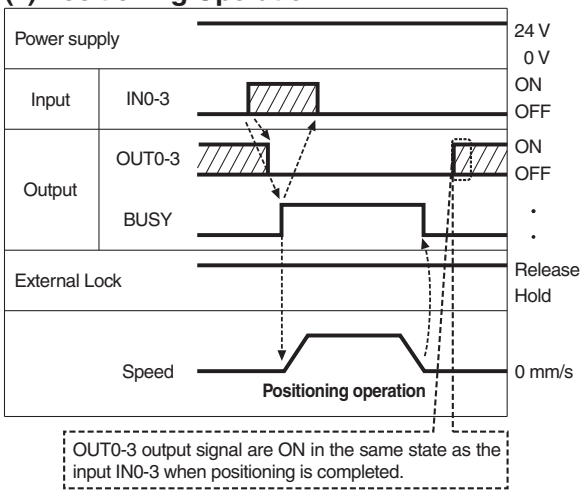

(3) Cut-off Stop (Reset Stop)

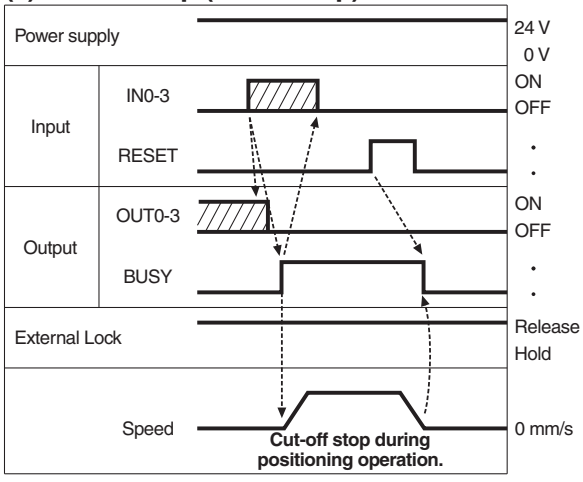

(4) Stop by the STOP Signal

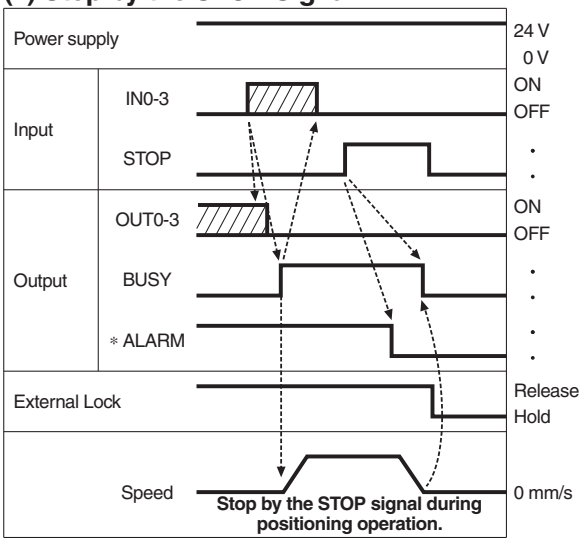

(5) Alarm Reset

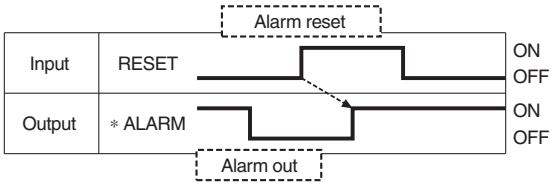

"∗ALARM" is expressed as negative-logic circuit.

Options: Actuator Cable

[Robotic cable, standard cable for step motor (servo/24 VDC)]

LE – CP – 1 – □

Cable length(L)[m]

1	1.5
3	3
5	5
8	8*
A	10*
B	15*
C	20*

* Produced upon receipt of order (Robotic cable only)

Cable type

Nil	Robotic cable (Flexible cable)
S	Standard cable

LE-CP- 1 3 5 **/Cable length: 1.5 m, 3 m, 5 m**

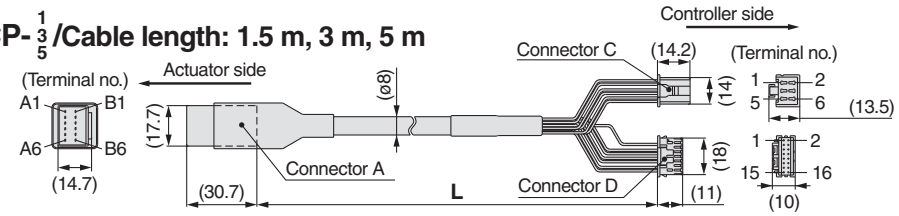

LE-CP- 8 A B C **/Cable length: 8 m, 10 m, 15 m, 20 m**
(* Produced upon receipt of order)

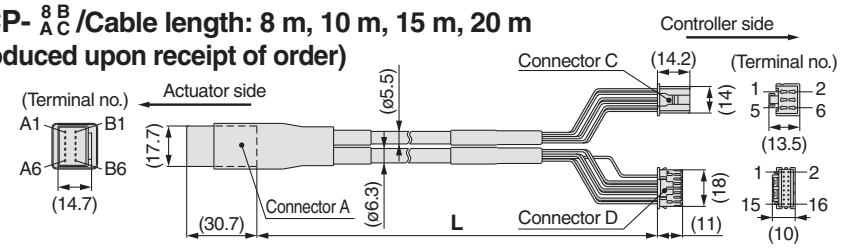

Signal	Connector A terminal no.	Cable color	Connector C terminal no.
A	B-1	Brown	2
$\overline{A}$	A-1	Red	1
B	B-2	Orange	6
$\overline{B}$	A-2	Yellow	5
COM-A/COM	B-3	Green	3
COM-B/–	A-3	Blue	4
		Shield	

Signal	Connector A terminal no.	Cable color	Connector D terminal no.
Vcc	B-4	Brown	12
GND	A-4	Black	13
$\overline{A}$	B-5	Red	7
A	A-5	Black	6
$\overline{B}$	B-6	Orange	9
B	A-6	Black	8
		—	3

Options

[Power supply cable]

LEC – CK1 – 1

Terminal name	Covered color	Function
0V	Blue	Common supply (–)
M24V	White	Motor power supply (+)
C24V	Brown	Control power supply (+)
BK RLS	Black	Lock release (+)

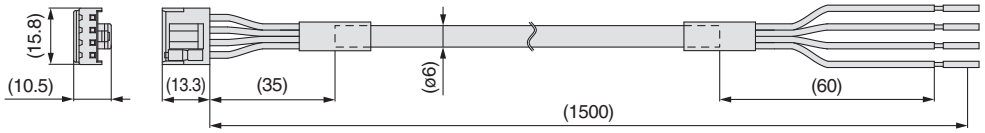

* Conductor size: AWG20

[I/O cable]

LEC – CK4 – □

Cable length(L)[m]

1	1.5
3	3
5	5

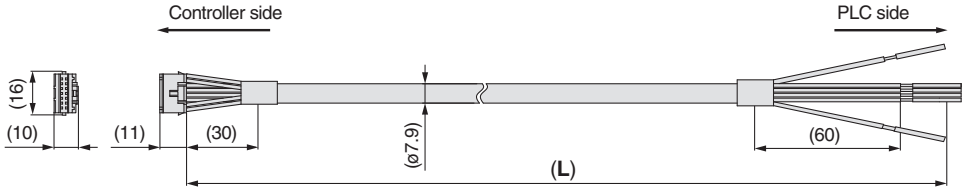

* Conductor size: AWG26

Terminal no.	Insulation color	Dot mark	Dot color	Function
1	Light brown	■	Black	COM +
2	Light brown	■	Red	COM –
3	Yellow	■	Black	OUT0
4	Yellow	■	Red	OUT1
5	Light green	■	Black	OUT2
6	Light green	■	Red	OUT3
7	Gray	■	Black	BUSY

Terminal no.	Insulation color	Dot mark	Dot color	Function
8	Gray	■	Red	ALARM
9	White	■	Black	IN0
10	White	■	Red	IN1
11	Light brown	■ ■	Black	IN2
12	Light brown	■ ■	Red	IN3
13	Yellow	■ ■	Black	RESET
14	Yellow	■ ■	Red	STOP

* Parallel I/O signal is valid in auto mode. While the test function operates at manual mode, only the output is valid.

Controller

Step Data Input Type ····· Page 25

Step Motor
(Servo/24 VDC)

Series LECP6

Servo Motor
(24 VDC)

Series LECA6

Programless Type ····· Page 37

Step Motor
(Servo/24 VDC)

Series LECP1

Controller (Step Data Input Type)
Step Motor (Servo/24 VDC)
Series LECP6
Servo Motor (24 VDC)
Series LECA6

Series LECP6 ***Series LECA6***

How to Order

⚠Caution

Note 1) CE-compliant products
①EMC compliance was tested by combining the electric actuator LEF series and the controller LEC series. The EMC depends on the configuration of the customer's control panel and the relationship with other electrical equipment and wiring. Therefore conformity to the EMC directive cannot be certified for SMC components incorporated into the customer's equipment under actual operating conditions. As a result it is necessary for the customer to verify conformity to the EMC directive for the machinery and equipment as a whole.
②For the LECA6 series (servo motor controller), EMC compliance was tested by installing a noise filter set (LEC-NFA). Refer to page 33 for the noise filter set. Refer to the LECA Operation Manual for installation.

LE C P 6 N □ □ – □

Controller

Compatible motor

P	Step motor (Servo/24 VDC)
A	Servo motor (24 VDC) Note 1)

Number of step data (Points)

6	64

Parallel I/O type

N	NPN
P	PNP

I/O cable length [m]

Nil	Without cable
1	1.5
3	3
5	5

Option

Nil	Screw mounting
D Note 2)	DIN rail mounting

Note 2) DIN rail is not included. Order it separately.

Actuator part number

(Except cable specifications and actuator options)
Example: Enter [LEFS16A-400] for LEFS16A-400B-R16N1

∗ When controller equipped type (-□6N□/-□6P□) is selected when ordering the LE series, you do not need to order this controller.

The controller is sold as single unit after the compatible actuator is set.

Confirm that the combination of the controller and the actuator is correct.

<Check the following before use.>

① Check that actuator label for model number. This matches the controller.
② Check Parallel I/O configuration matches (NPN or PNP).

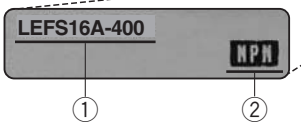

∗ Refer to the operation manual for using the products. Please download it via our website. http://www.smcworld.com

Specifications

Basic Specifications

Item	LECP6	LECA6
Compatible motor	Step motor (Servo/24 VDC)	Servo motor (24 VDC)
Power supply Note 1)	Power voltage: 24 VDC ±10% Current consumption: 3 A (Peak 5 A) Note 2) [Including motor drive power, control power, stop, lock release]	Power voltage: 24 VDC ±10% Current consumption: 3 A (Peak 10 A) Note 2) [Including motor drive power, control power, stop, lock release]
Parallel input	11 inputs (Photo-coupler isolation)	
Parallel output	13 outputs (Photo-coupler isolation)	
Compatible encoder	Incremental A/B phase (800 pulse/rotation)	Incremental A/B/Z phase (800 pulse/rotation)
Serial communication	RS485 (Modbus protocol compliant)	
Memory	EEPROM	
LED indicator	LED (Green/Red) one of each	
Lock control	Forced-lock release terminal Note 3)	
Cable length [m]	I/O cable: 5 or less Actuator cable: 20 or less	
Cooling system	Natural air cooling	
Operating temperature range	32 to 104°F [0 to 40°C] (No freezing)	
Operating humidity range [%RH]	90 or less (No condensation)	
Storage temperature range	14 to 140°F [–10 to 60°C] (No freezing)	
Storage humidity range [%RH]	90 or less (No condensation)	
Insulation resistance [MΩ]	Between the housing (radiation fin) and SG terminal 50 (500 VDC)	
Weight lbs [g]	0.33 [150] (Screw mounting) 0.37 [170] (DIN rail mounting)	

Note 1) Do not use the power supply of "inrush current prevention type" for the controller power supply.
Note 2) The power consumption changes depending on the actuator model. Refer to the specifications of actuator for more details.
Note 3) Applicable to non-magnetizing lock.

How to Mount

a) Screw mounting (LEC□6□□-□)
(Installation with two M4 screws)

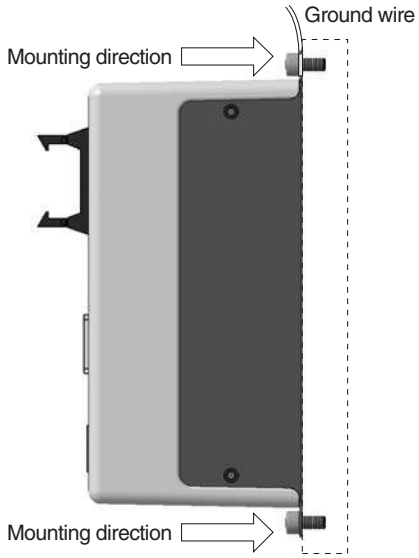

b) DIN rail mounting (LEC□6□□D-□)
(Installation with the DIN rail)

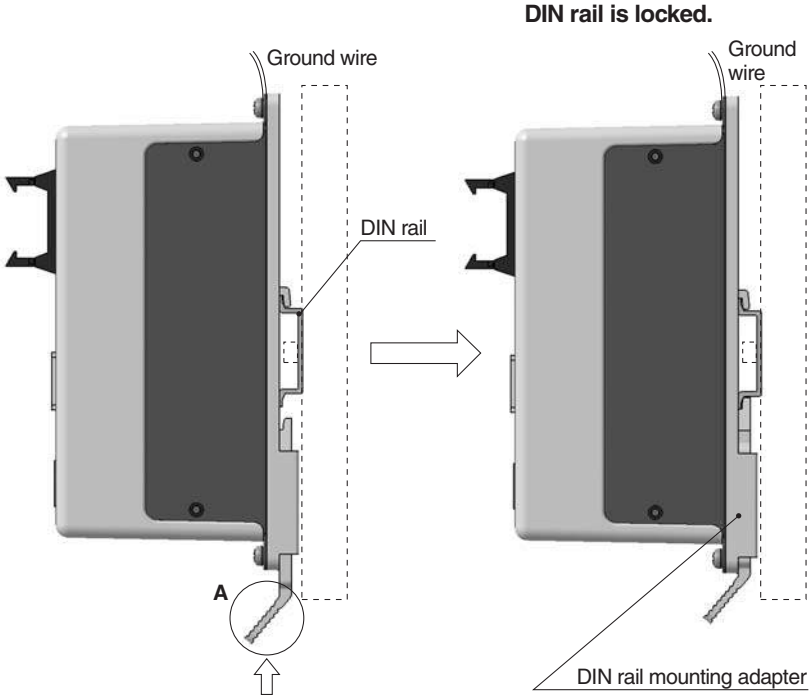

Hook the controller on the DIN rail and press the lever of section **A** in the arrow direction to lock it.

DIN rail
AXT100-DR-□

∗ For □, enter a number from the "No." line in the table below.
Refer to the dimensions on page 27 for the mounting dimensions.

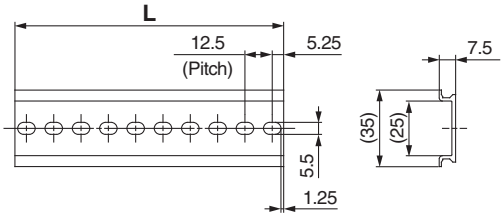

L Dimension [mm]

No.	1	2	3	4	5	6	7	8	9	10	11	12	13	14	15	16	17	18	19	20
L	23	35.5	48	60.5	73	85.5	98	110.5	123	135.5	148	160.5	173	185.5	198	210.5	223	235.5	248	260.5

No.	21	22	23	24	25	26	27	28	29	30	31	32	33	34	35	36	37	38	39	40
L	273	285.5	298	310.5	323	335.5	348	360.5	373	385.5	398	410.5	423	435.5	448	460.5	473	485.5	498	510.5

DIN rail mounting adapter
LEC-D0 (with 2 mounting screws)

This should be used when the DIN rail mounting adapter is mounted onto the screw mounting type controller afterwards.

Dimensions

a) Screw mounting (LEC□6□□-□)

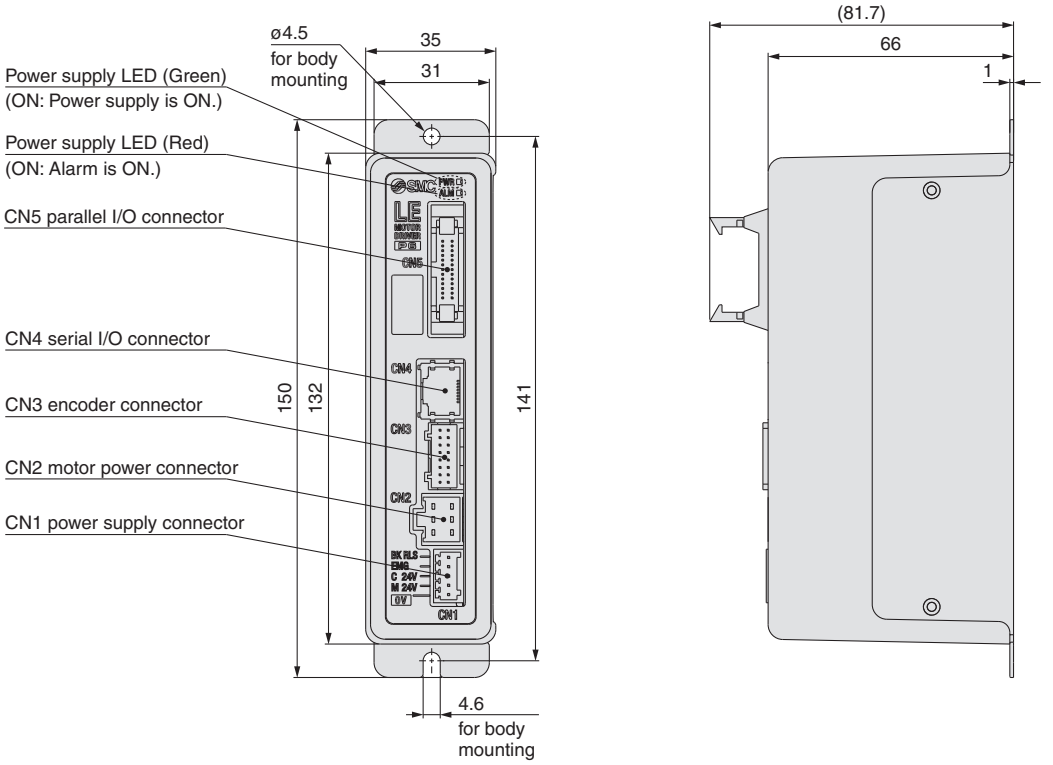

b) DIN rail mounting (LEC□6□□D-□)

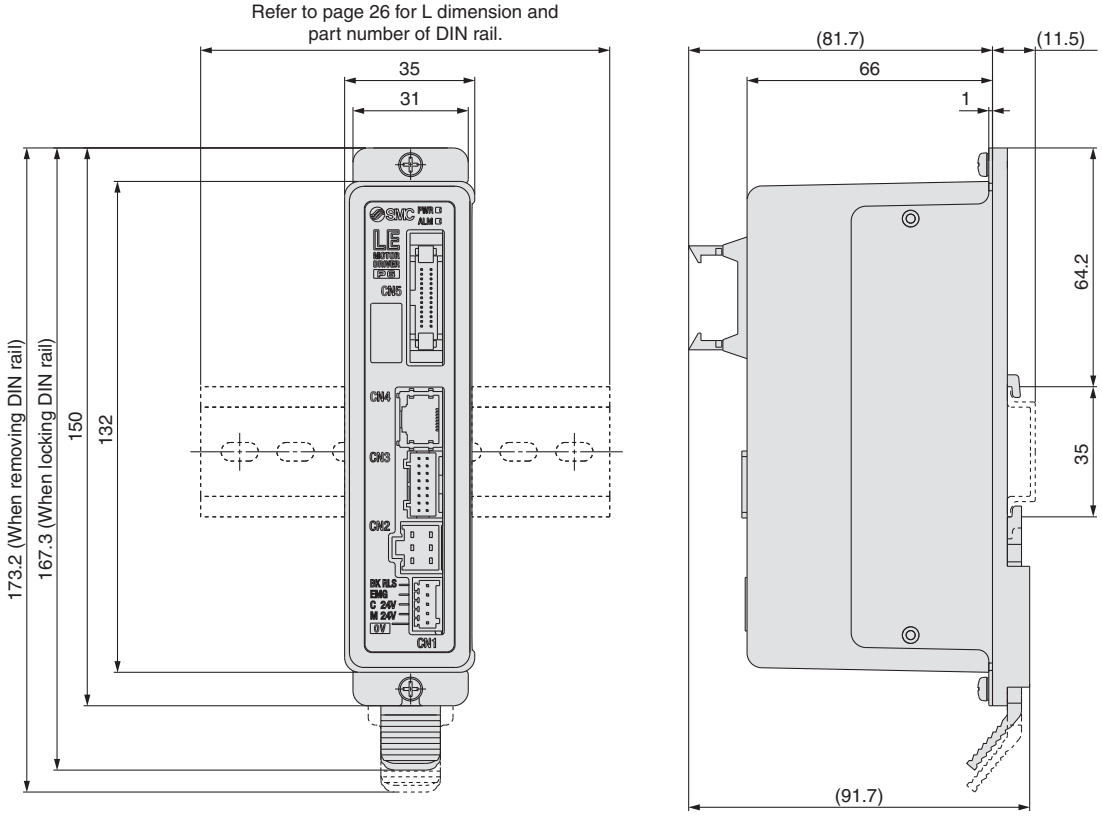

Wiring Example 1

Power Supply Connector: CN1

∗ Power supply plug is an accessory.

CN1 Power Supply Connector Terminal for LECP6 (PHOENIX CONTACT FK-MC0.5/5-ST-2.5)

Terminal name	Function	Function details
0V	Common supply (–)	M24V terminal/C24V terminal/EMG terminal/BK RLS terminal are common (–).
M24V	Motor power supply (+)	This is the motor power supply (+) that is supplied to the controller.
C24V	Control power supply (+)	This is the control power supply (+) that is supplied to the controller.
EMG	Stop (+)	This is the input (+) that releases the stop.
BK RLS	Lock release (+)	This is the input (+) that releases the lock.

Power supply plug for LECP6

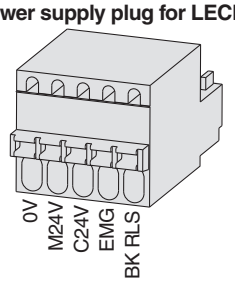

CN1 Power Supply Connector Terminal for LECA6 (PHOENIX CONTACT FK-MC0.5/7-ST-2.5)

Terminal name	Function	Function details
0V	Common supply (–)	M24V terminal/C24V terminal/EMG terminal/BK RLS terminal are common (–).
M24V	Motor power supply (+)	This is the motor power supply (+) that is supplied to the controller.
C24V	Control power supply (+)	This is the control power supply (+) that is supplied to the controller.
EMG	Stop (+)	This is the input (+) that releases the stop.
BK RLS	Lock release (+)	This is the input (+) that releases the lock.
RG+	Regenerative output 1	These are the regenerative output terminals for external connection. (It is not necessary to connect them in the combination with standard specification LE series.)
RG–	Regenerative output 2	

Power supply plug for LECA6

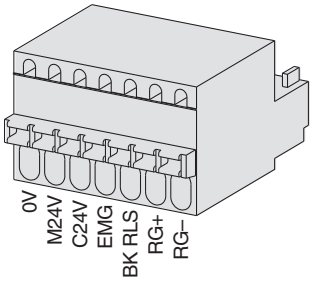

Wiring Example 2

Parallel I/O Connector: CN5

∗ When you connect a PLC, etc., to the CN5 parallel I/O connector, please use the I/O cable (LEC-CN5-□).
∗ The wiring should be changed depending on the type of the parallel I/O (NPN or PNP). Please wire referring to the following diagram.

Wiring diagram

LEC□6N□□-□ (NPN)

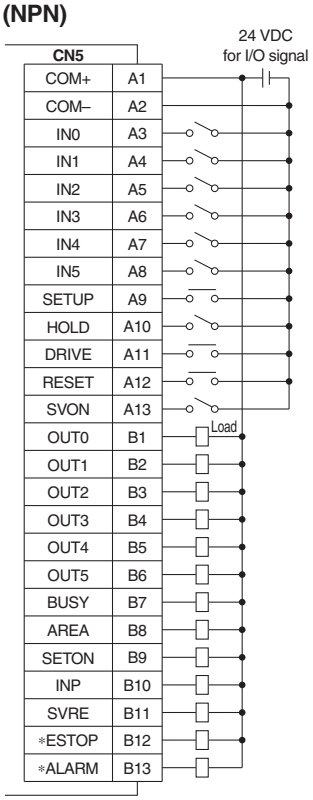

LEC□6P□□-□ (PNP)

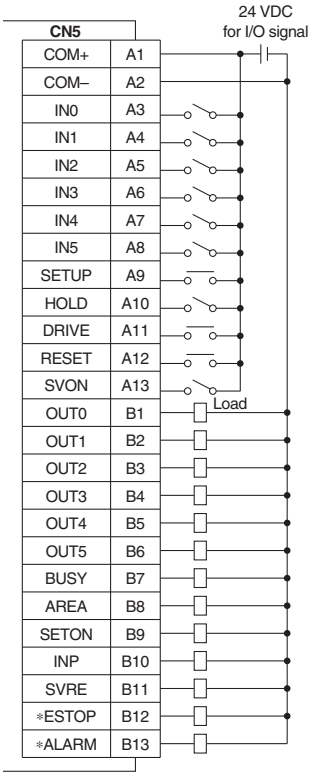

Input Signal

Name	Contents
COM +	Connects the power supply 24 V for input/output signal
COM –	Connects the power supply 0 V for input/output signal
IN0 to IN5	Step data specified Bit No. (Input is instructed in the combination of IN0 to 5.)
SETUP	Instruction to return to the original position
HOLD	Operation is temporarily stopped
DRIVE	Instruction to drive
RESET	Alarm reset and operation interruption
SVON	Servo ON instruction

Output Signal

Name	Contents
OUT0 to OUT5	Outputs the step data No. during operation
BUSY	Outputs when the actuator is moving
AREA	Outputs within the step data area output setting range
SETON	Outputs when returning to the original position
INP	Outputs when target position or target force is reached (Turns on when the positioning or pushing is completed.)
SVRE	Outputs when servo is on
∗ESTOP Note)	Not output when EMG stop is instructed
∗ALARM Note)	Not output when alarm is generated

Note) These signals are output when the power supply of the controller is ON. (N.C.)

Step Data Setting

1. Step data setting for positioning

In this setting, the actuator moves toward and stops at the target position. The following diagram shows the setting items and operation. The setting items and set values for this operation are stated below.

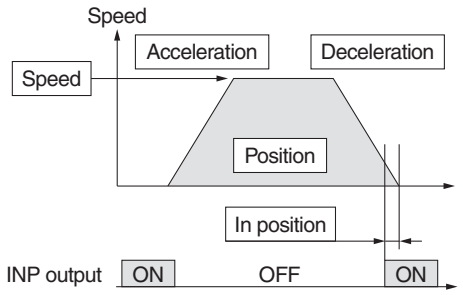

◎: Need to be set.
○: Need to be adjusted as required.
—: Setting is not required.

Step Data (Positioning)

Necessity	Item	Description
◎	Movement MOD	When the absolute position is required, set Absolute. When the relative position is required, set Relative.
◎	Speed	Transfer speed to the target position
◎	Position	Target position
○	Acceleration	Parameter which defines how rapidly the actuator reaches the speed set. The higher the set value, the faster it reaches the speed set.
○	Deceleration	Parameter which defines how rapidly the actuator comes to stop. The higher the set value, the quicker it stops.
◎	Pushing force	Set 0. (If values 1 to 100 are set, the operation will be changed to the pushing operation.)
—	Trigger LV	Setting is not required.
—	Pushing speed	Setting is not required.
○	Positioning force	Max. torque during the positioning operation (No specific change is required.)
○	Area 1, Area 2	Condition that turns on the AREA output signal.
○	In position	Condition that turns on the INP output signal. When the actuator enters the range of [in position], the INP output signal turns on. (It is unnecessary to change this from the initial value.) When it is necessary to output the arrival signal before the operation is completed, make the value larger.

Signal Timing

Return to Origin

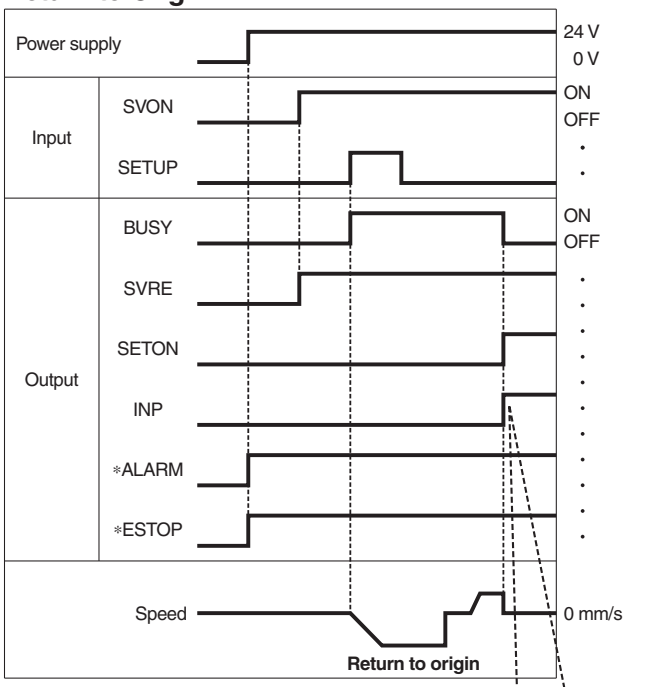

∗ "∗ALARM" and "∗ESTOP" are expressed as negative-logic circuit.

Positioning Operation

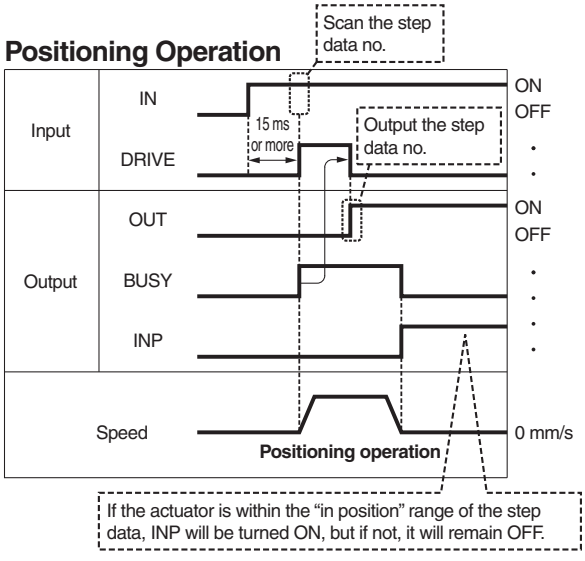

∗ "OUT" is output when "DRIVE" is changed from ON to OFF.
(When power supply is applied, "DRIVE" or "RESET" is turned ON or "∗ESTOP" is turned OFF, all of the "OUT" outputs are turned OFF.)

HOLD

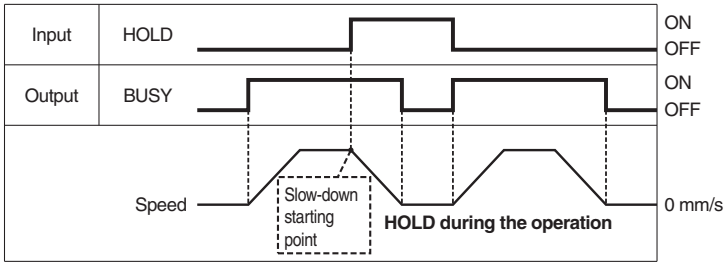

∗ When the actuator is in the positioning range in the pushing operation, it does not stop even if HOLD signal is input.

Reset

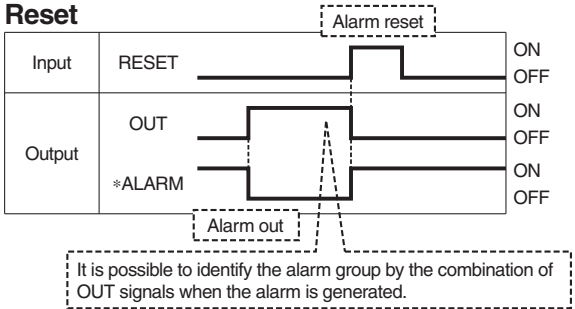

∗ "∗ALARM" is expressed as negative-logic circuit.

Options: Actuator Cable

(mm)

[Robotic cable for step motor (Servo/24 VDC), standard cable]

LE – CP – 1 – □

Cable length (L)[m]

1	1.5
3	3
5	5
8	8*
A	10*
B	15*
C	20*

* Produced upon receipt of order (Robotic cable only)

Cable type

Nil	Robotic cable (Flexible cable)
S	Standard cable

LE-CP-$^{1}_{3}_{5}$/Cable length: 1.5 m, 3 m, 5 m

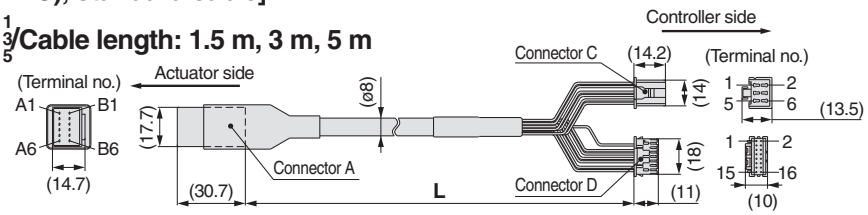

LE-CP-$^{8\ B}_{A\ C}$/Cable length: 8 m, 10 m, 15 m, 20 m
(* Produced upon receipt of order)

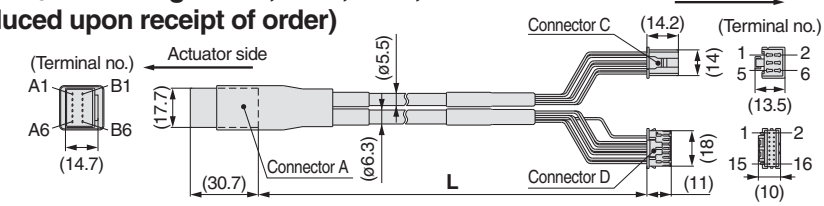

Circuit	Connector A terminal no.
A	B-1
$\overline{A}$	A-1
B	B-2
$\overline{B}$	A-2
COM-A/COM	B-3
COM-B/–	A-3
Vcc	B-4
GND	A-4
$\overline{A}$	B-5
A	A-5
$\overline{B}$	B-6
B	A-6

Cable color	Connector C terminal no.
Brown	2
Red	1
Orange	6
Yellow	5
Green	3
Blue	4

Shield

Cable color	Connector D terminal no.
Brown	12
Black	13
Red	7
Black	6
Orange	9
Black	8
—	3

[Robotic cable with lock and sensor for step motor (Servo/24 VDC), standard cable]

LE – CP – 1 – B – □

Cable length (L)[m]

1	1.5
3	3
5	5
8	8*
A	10*
B	15*
C	20*

* Produced upon receipt of order (Robotic cable only)

With lock and sensor

Cable type

Nil	Robotic cable (Flexible cable)
S	Standard cable

LE-CP-$^{1}_{3}_{5}$/Cable length: 1.5 m, 3 m, 5 m

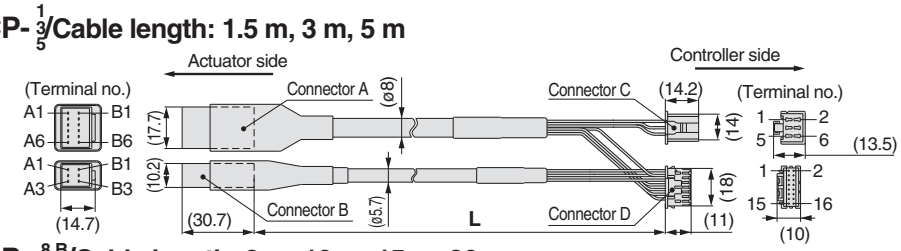

LE-CP-$^{8\ B}_{A\ C}$/Cable length: 8 m, 10 m, 15 m, 20 m
(* Produced upon receipt of order)

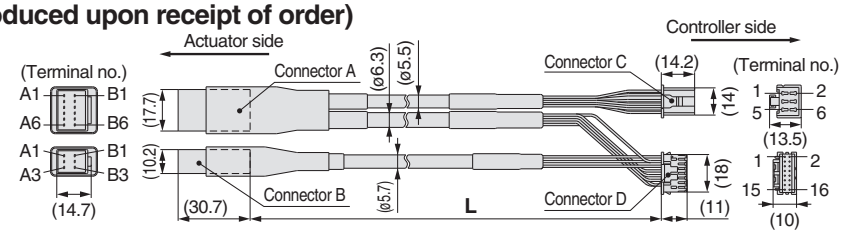

Circuit	Connector A terminal no.
A	B-1
$\overline{A}$	A-1
B	B-2
$\overline{B}$	A-2
COM-A/COM	B-3
COM-B/–	A-3
Vcc	B-4
GND	A-4
$\overline{A}$	B-5
A	A-5
$\overline{B}$	B-6
B	A-6

Cable color	Connector C terminal no.
Brown	2
Red	1
Orange	6
Yellow	5
Green	3
Blue	4

Shield

Cable color	Connector D terminal no.
Brown	12
Black	13
Red	7
Black	6
Orange	9
Black	8
—	3

Circuit	Connector B terminal no.
Lock (+)	B-1
Lock (–)	A-1
Sensor (+) Note)	B-3
Sensor (–) Note)	A-3

Red	4
Black	5
Brown	1
Blue	2

Note) This is not used for the LEF series.

(mm)

[Robot cable for servo motor (24 VDC)]

LE – CA – 1

Cable length (L)[m]

1	1.5
3	3
5	5
8	8*
A	10*
B	15*
C	20*

* Produced upon receipt of order

LE-CA-□

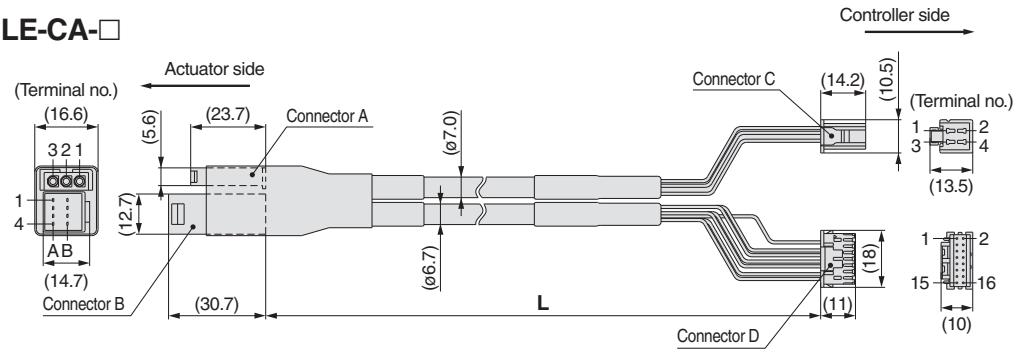

Circuit	Connector A terminal no.
U	1
V	2
W	3

Cable color	Connector C terminal no.
Red	1
White	2
Black	3

Circuit	Connector B terminal no.
Vcc	B-1
GND	A-1
$\overline{A}$	B-2
A	A-2
$\overline{B}$	B-3
B	A-3
$\overline{Z}$	B-4
Z	A-4

Shield

Cable color	Connector D terminal no.
Brown	12
Black	13
Red	7
Black	6
Orange	9
Black	8
Yellow	11
Black	10
—	3

Connection of shield material

[Robot cable with lock and sensor for servo motor (24 VDC)]

LE – CA – 1 – B

Cable length (L)[m]

1	1.5
3	3
5	5
8	8*
A	10*
B	15*
C	20*

* Produced upon receipt of order

With lock and sensor

LE-CA-□-B

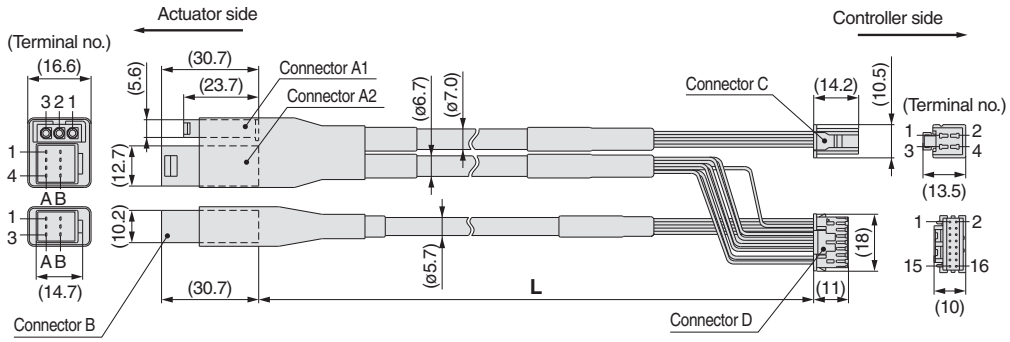

Circuit	Connector A1 terminal no.
U	1
V	2
W	3

Cable color	Connector C terminal no.
Red	1
White	2
Black	3

Circuit	Connector A2 terminal no.
Vcc	B-1
GND	A-1
$\overline{A}$	B-2
A	A-2
$\overline{B}$	B-3
B	A-3
$\overline{Z}$	B-4
Z	A-4

Shield

Cable color	Connector D terminal no.
Brown	12
Black	13
Red	7
Black	6
Orange	9
Black	8
Yellow	11
Black	10
—	3

Connection of shield material

Circuit	Connector B terminal no.
Lock (+)	B-1
Lock (–)	A-1
Sensor (+) Note)	B-3
Sensor (–) Note)	A-3

Cable color	Connector D terminal no.
Red	4
Black	5
Brown	1
Black	2

Note) This is not used for the LEF series.

Option: I/O Cable

(mm)

LEC − CN5 − 1

Cable length (L) [m]

1	1.5
3	3
5	5

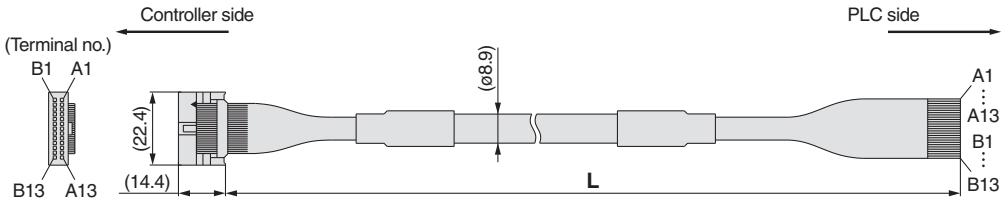

Connector pin No.	Insulation color	Dot mark	Dot color
A1	Light brown	■	Black
A2	Light brown	■	Red
A3	Yellow	■	Black
A4	Yellow	■	Red
A5	Light green	■	Black
A6	Light green	■	Red
A7	Gray	■	Black
A8	Gray	■	Red
A9	White	■	Black
A10	White	■	Red
A11	Light brown	■ ■	Black
A12	Light brown	■ ■	Red
A13	Yellow	■ ■	Black

Connector pin No.	Insulation color	Dot mark	Dot color
B1	Yellow	■ ■	Red
B2	Light green	■ ■	Black
B3	Light green	■ ■	Red
B4	Gray	■ ■	Black
B5	Gray	■ ■	Red
B6	White	■ ■	Black
B7	White	■ ■	Red
B8	Light brown	■ ■ ■	Black
B9	Light brown	■ ■ ■	Red
B10	Yellow	■ ■ ■	Black
B11	Yellow	■ ■ ■	Red
B12	Light green	■ ■ ■	Black
B13	Light green	■ ■ ■	Red
—	Shield		

∗ Conductor size: AWG28

Option: Noise Filter Set for Servo Motor (24 VDC)

LEC − NFA

Contents of the set: 2 noise filters (Produced by WURTH ELEKTRONIK: 74271222)

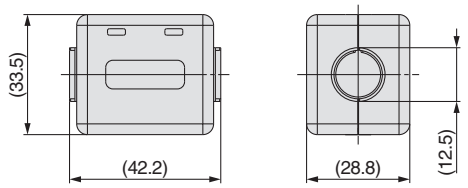

∗ Refer to the LECA6 series Operation Manual for installation.

Controller Setting Kit/LEC-W1

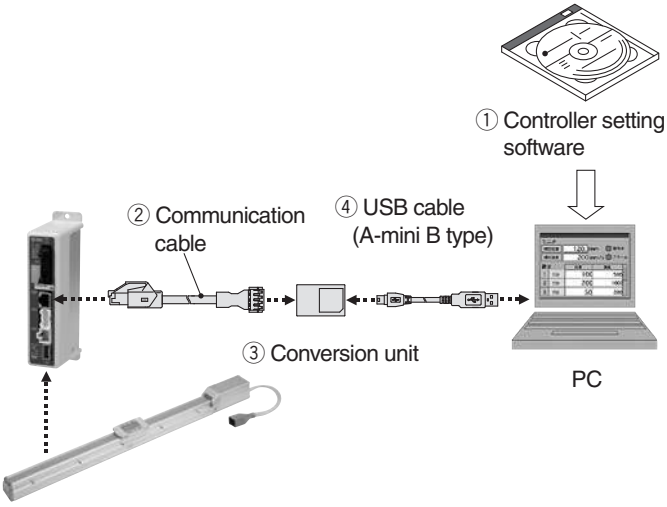

How to Order

LEC – W1

Controller setting kit
(Japanese and English are available.)

Contents

① **Controller setting software (CD-ROM)**
② **Communication cable (Cable between the controller and the conversion unit)**
③ **Conversion unit**
④ **USB cable (Cable between the PC and the conversion unit)**

Hardware Requirements

PC/AT compatible machine installed with Windows XP and equipped with USB1.1 or USB2.0 ports.

∗ Windows® and Windows XP® are registered trademarks of Microsoft Corporation.

Screen Example

Easy mode screen example

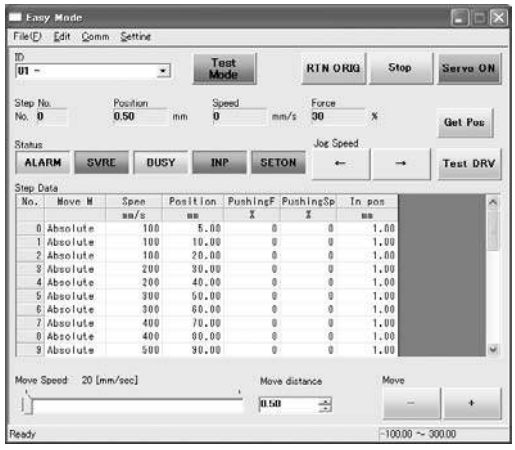

Easy operation and simple setting

- Allowing to set and display actuator step data such as position, speed, force, etc.
- Setting of step data and testing of the drive can be performed on the same page.
- Can be used to jog and move at a constant rate.

Normal mode screen example

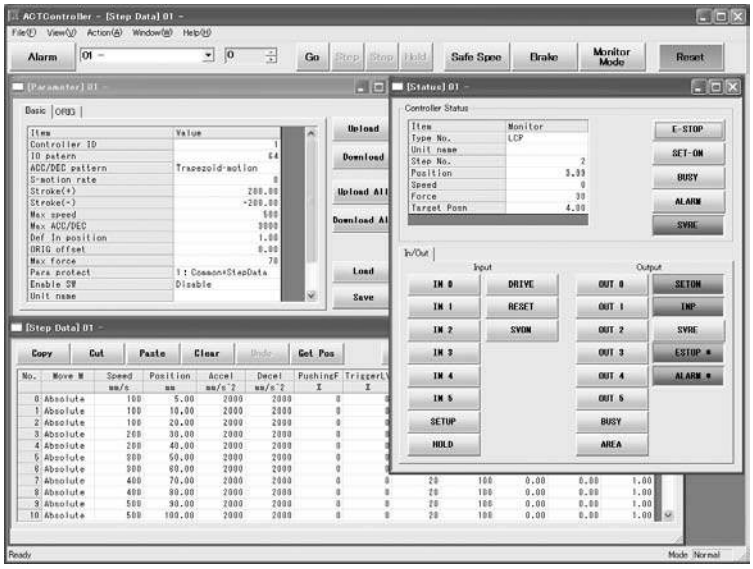

Detail setting

- Step data can be set in detail.
- Signals and terminal status can be monitored.
- Parameters can be set.
- JOG and constant rate movement, return to origin, test operation and testing of compulsory output can be performed.

Series LEC
Teaching Box/LEC-T1

How to Order

LEC – T1 – 3 J G □

Teaching box

Cable length [m]

3	3

Initial language

J	Japanese
E	English

Stop switch

G	Equipped with stop switch

Enable switch

Nil	None
S	Equipped with enable switch

∗ Interlock switch for jog test function

Standard functions
- **Chinese character display**
- **Stop switch is provided.**

Option
- **Enable switch is provided.**

Specifications

Item	Description
Switch	Stop switch, Enable switch (Option)
Cable length [m]	3
Enclosure	IP64 (Except connector)
Operating temperature range	41° to 122°F (5 to 50°C)
Operating humidity range [%RH]	90 or less (No condensation)
Weight [g]	350 (Except cable)

Note) CE-compliance
The EMC compliance of the teaching box was tested with the LECP6 series step motor controller (servo/24 VDC) and an applicable actuator.

Easy Mode

Function	Description
Step data	• Setting of step data
Jog	• Jog operation • Return to origin
Test	• 1 step operation • Return to origin
Monitor	• Display of axis and step data No. • Display of two items selected from Position, Speed, Force.
Alarm	• Display of active alarm • Alarm reset
TB setting	• Reconnection of axis • Setting of easy/normal mode • Setting step data and selection of items from easy mode monitor

Menu Operations Flowchart

Menu
- Data
- Monitor
- Jog
- Test
- Alarm
- TB setting

Data
Step data No.
Setting of two items selected below
(Position, Speed, Force, Acceleration, Deceleration)

Monitor
Display of step No.
Display of two items selected below
(Position, Speed, Force)

Jog
Return to origin
Jog operation

Test
1 step operation

Alarm
Display of active alarm
Alarm reset

TB setting
Reconnect
Easy/Normal
Set item

Normal Mode

Function	Description
Step data	• Step data setting
Parameter	• Parameters setting
Test	• Jog operation/Constant rate movement • Return to origin • Test drive (Specify a maximum of 5 step data and operate.) • Compulsory output (Compulsory signal output, Compulsory terminal output)
Monitor	• Drive monitor • Output signal monitor • Input signal monitor • Output terminal monitor • Input terminal monitor
Alarm	• Active alarm display (Alarm reset) • Alarm log record display
File	• Data saving Save the step data and parameters of the controller which is being used for communication (it is possible to save four files, with one set of step data and parameters defined as one file). • Load to controller Loads the data which is saved in the teaching box to the controller which is being used for communication. • Delete the saved data.
TB setting	• Display setting (Easy/Normal mode) • Language setting (Japanese/English) • Backlight setting • LCD contrast setting • Beep sound setting • Max. connection axis • Distance unit (mm/inch)
Reconnect	• Reconnection of axis

Menu Operations Flowchart

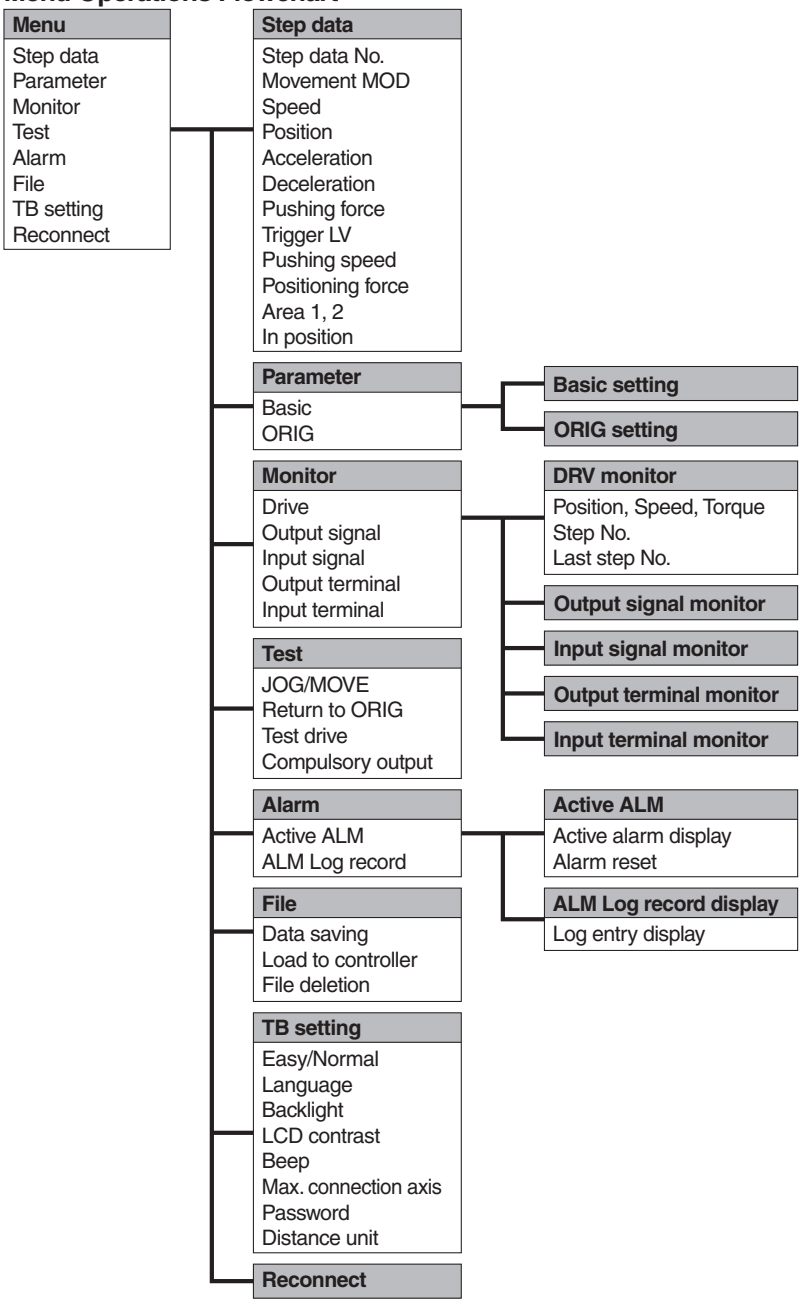

Dimensions

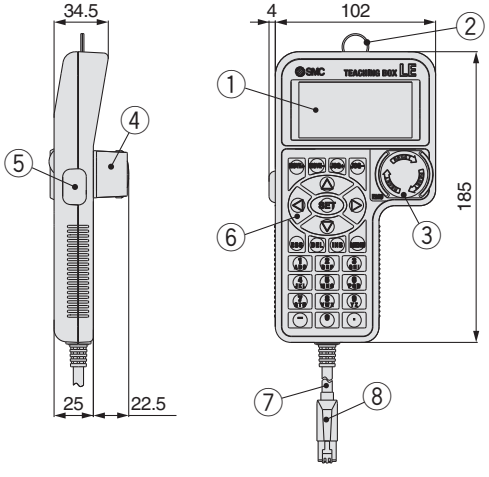

No.	Description	Function
1	**LCD**	A screen of liquid crystal display (with backlight)
2	**Ring**	A ring for hanging the teaching box
3	**Stop switch**	When switch is pushed in, the switch locks and stops. The lock is released when it is turned to the right.
4	**Stop switch guard**	A guard for the stop switch
5	**Enable switch (Option)**	Prevents unintentional operation (unexpected operation) of the jog test function. Other functions such as data change are not covered.
6	**Key switch**	Switch for each input
7	**Cable**	Length: 3 meters
8	**Connector**	A connector connected to CN4 of the controller

Programless Controller
Series LECP1

How to Order

LE C P 1 N 1 – LEFS16A-400

Controller

Compatible motor

P	Step motor (Servo/24 VDC)

Number of step data (Points)

1	14 (Programless)

Parallel I/O type

N	NPN
P	PNP

I/O cable length [m]

Nil	Without cable
1	1.5
3	3
5	5

Actuator part number

(Except cable specifications and actuator options)
Example: Enter [LEFS16A-400] for LEFS16A-400B-R16N1

∗ **When placing an order for the controller with an actuator, this part number is not necessary.**

The controller is sold as single unit after the compatible actuator is set.

Confirm that the combination of the controller and the actuator is correct.

∗ Refer to the operation manual for using the products. Please download it via our website. http://www.smcworld.com

Specifications

Basic Specifications

Item	LECP1
Compatible motor	Step motor (Servo/24 VDC)
Power supply Note 1)	Power supply voltage: 24 VDC ±10% Max. current consumption: 3A (Peak 5A) Note 2) [Including the motor drive power, control power supply, stop, lock release]
Parallel input	6 inputs (Photo-coupler isolation)
Parallel output	6 outputs (Photo-coupler isolation)
Stop points	14 points (Position number 1 to 14(E))
Compatible encoder	Incremental A/B phase (800 pulse/rotation)
Serial communication	RS485 (Modbus protocol compliant)
Memory	EEPROM
LED indicator	LED (Green/Red) one of each
7-segment LED display Note 3)	1 digit, 7-segment display (red) Figures are expressed in hexadecimal (“10” to “15” in decimal number are expressed as “A” to “F”)
Lock control	Forced-lock release terminal Note 4)
Cable length [m]	I/O cable: 5 or less Actuator cable: 20 or less
Cooling system	Natural air cooling
Operating temperature range	32 to 104°F (0 to 40°C) (No freezing)
Operating humidity range [%RH]	90 or less (No condensation)
Storage temperature range	14 to 140° (–10 to 60°C) (No freezing)
Storage humidity range [%RH]	90 or less (No condensation)
Insulation resistance [MΩ]	Between the housing (radiation fin) and SG terminal 50 (500 VDC)
Weight lb [g]	0.29 [130]

Note 1) Do not use the power supply of “inrush current prevention type” for the controller input power supply.
Note 2) The power consumption changes depending on the actuator model. Refer to the each actuator’s operation manual etc. for details.
Note 3) “10” to “15” in decimal number are displayed as follows in the 7-segment LED.

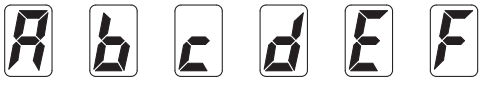

Decimal display	10	11	12	13	14	15
Hexadecimal display	A	b	c	d	E	F

Note 4) Applicable to non-magnetizing lock.

Details of The Controller

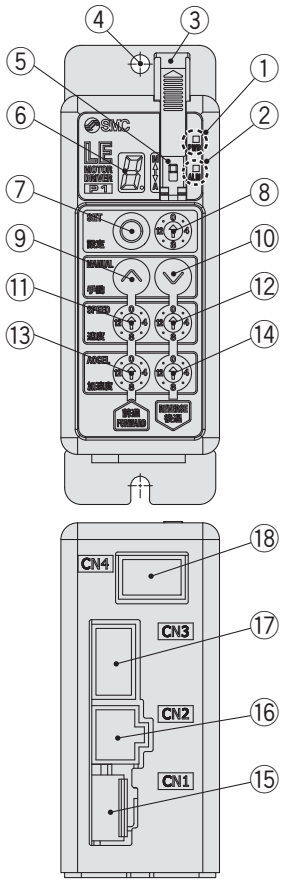

No.	Display	Description	Details
①	**PWR**	Power supply LED	Power supply ON/servo ON :Green turns on Power supply ON/servo OFF :Green flashes
②	**ALM**	Alarm LED	With alarm : Red turns on Parameter setting : Red flashes
③	—	Cover	Change and protection of the mode SW (Close the cover after changing SW)
④	—	FG	Frame ground (Tighten the bolt with the nut when mounting the controller. Connect the ground wire.)
⑤	—	Mode swith	Switch the mode between manual and auto.
⑥	—	7-segment LED	Stop position, the value set by ⑧ and alarm information are displayed.
⑦	**SET**	Set button	Decide the settings or drive operation in Manual mode.
⑧	—	Position selecting switch	Assign the position to drive (1 to 14), and the origin position (15).
⑨	**MANUAL**	Manual forward button	Perform forward jog and inching.
⑩		Manual reverse button	Perform reverse jog and inching.
⑪	**SPEED**	Forward speed switch	16 forward speeds are available.
⑫		Reverse speed switch	16 reverse speeds are available.
⑬	**ACCEL**	Forward acceleration switch	16 forward acceleration steps are available.
⑭		Reverse acceleration switch	16 reverse acceleration steps are available.
⑮	**CN1**	Power supply connector	Connect the power supply cable.
⑯	**CN2**	Motor connector	Connect the motor connector.
⑰	**CN3**	Encoder connector	Connect the encoder connector.
⑱	**CN4**	I/O connector	Connect I/O cable.

How to Mount

Controller mounting shown below.

1. Mounting screw (LECP1□□-□)

(Installation with two M4 screws)

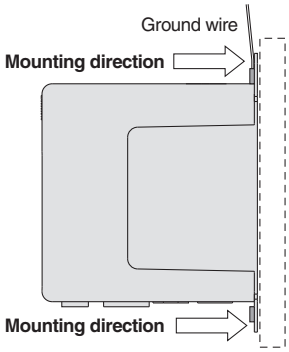

2. Grounding

Tighten the bolt with the nut when mounting the ground wire as shown below.

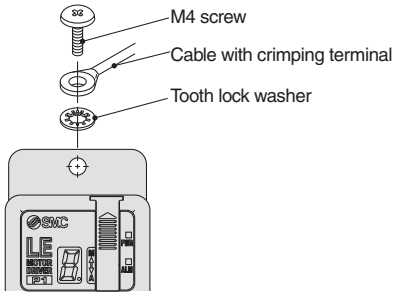

Controller

⚠Caution

- M4 screws, cable with crimping terminal and tooth lock washer are not included. Be sure to carry out grounding earth in order to ensure the noise tolerance.
- Use a watchmaker's screwdriver of the size shown below when changing position switch ⑧ and the set value of the speed/acceleration switch ⑪ to ⑭.

Size

End width **L** :2.0 to 2.4 [mm]
End thickness **W** :0.5 to 0.6 [mm]

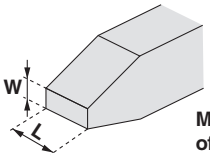

Magnified view of the end of the screwdriver

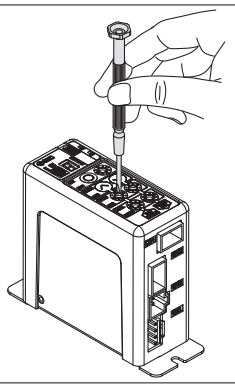

Dimensions

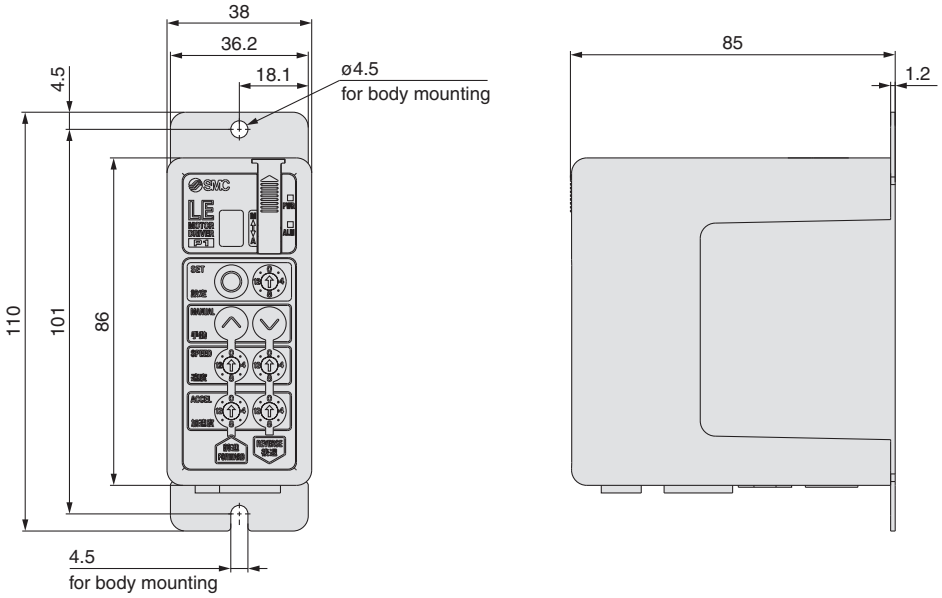
38
36.2
18.1
ø4.5
for body mounting
4.5
110
101
86
4.5
for body mounting
85
1.2

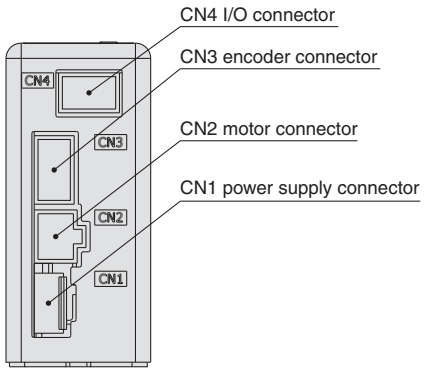
CN4 I/O connector
CN3 encoder connector
CN2 motor connector
CN1 power supply connector
CN4
CN3
CN2
CN1

Wiring Example 1

Power Supply Connector: CN1

* When you connect a CN1 power supply connector, please use the power supply cable (LEC-CK1-1).
* Power supply cable (LEC-CK1-1) is an accessory.

CN1 Power Supply Connector Terminal for LECP1

Terminal name	Cable color	Function	Function details
0V	Blue	Common supply (–)	M24V terminal/C24V terminal/BK RLS terminal are common (–).
M24V	White	Motor power supply (+)	This is the motor power supply (+) that is supplied to the controller.
C24V	Brown	Control power supply (+)	This is the control power supply (+) that is supplied to the controller.
BK RLS	Black	Lock release (+)	This is the input (+) that releases the lock.

Power supply cable for LECP1 (LEC-CK1-1)

Wiring Example 2

Parallel I/O Connector: CN4

* When you connect a PLC, etc., to the CN4 parallel I/O connector, please use the I/O cable (LEC-CK4-□).
* The wiring should be changed depending on the type of the parallel I/O (NPN or PNP). Please wire referring to the following diagram.

■NPN

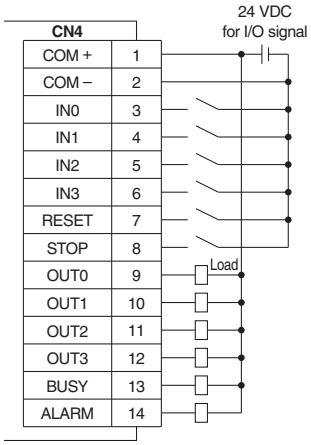

■PNP

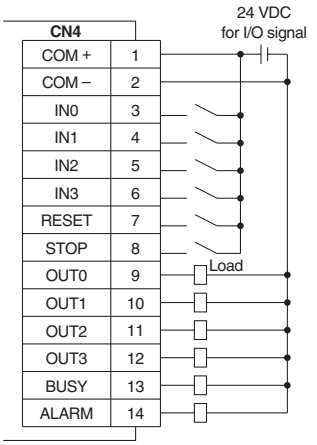

Input Signal

Name	Contents
COM+	Connects the power supply 24 V for input/output signal
COM–	Connects the power supply 0 V for input/output signal
IN0 to IN3	• Instruction to drive (input as a combination of IN0 to IN3) • Instruction to return to the origin position (IN0 to IN3 all ON simultaneously) Example - (instruction to drive for position no. 5) IN3: OFF, IN2: ON, IN1: OFF, IN0: ON
RESET	Alarm reset and operation interruption During operation : deceleration stop from position at which signal is input (servo ON maintained) While alarm is active : alarm reset
STOP	Instruction to stop (after maximum deceleration stop, servo OFF)

Output Signal

Name	Contents
OUT0 to OUT3	Turns on when the positioning or pushing is completed. (Output is instructed in the combination of OUT0 to 3.) Example - (operation complete for position no. 3) OUT3: OFF, OUT2: OFF, OUT1: ON, OUT0: ON
BUSY	Outputs when the actuator is moving
*ALARM Note)	Not output when alarm is active or servo OFF

Note) These signals are output when the power supply of the controller is ON. (N.C.)

Input Signal [IN0 - IN3] Position Number Chart ○: OFF ●: ON

Position number	IN3	IN2	IN1	IN0
1	○	○	○	●
2	○	○	●	○
3	○	○	●	●
4	○	●	○	○
5	○	●	○	●
6	○	●	●	○
7	○	●	●	●
8	●	○	○	○
9	●	○	○	●
10 (A)	●	○	●	○
11 (B)	●	○	●	●
12 (C)	●	●	○	○
13 (D)	●	●	○	●
14 (E)	●	●	●	○
Retun to origin	●	●	●	●

Output Signal [OUT0 - OUT3] Position Number Chart ○: OFF ●: ON

Position number	OUT3	OUT2	OUT1	OUT0
1	○	○	○	●
2	○	○	●	○
3	○	○	●	●
4	○	●	○	○
5	○	●	○	●
6	○	●	●	○
7	○	●	●	●
8	●	○	○	○
9	●	○	○	●
10 (A)	●	○	●	○
11 (B)	●	○	●	●
12 (C)	●	●	○	○
13 (D)	●	●	○	●
14 (E)	●	●	●	○
Retun to origin	●	●	●	●

Signal Timing

(1) Return to Origin

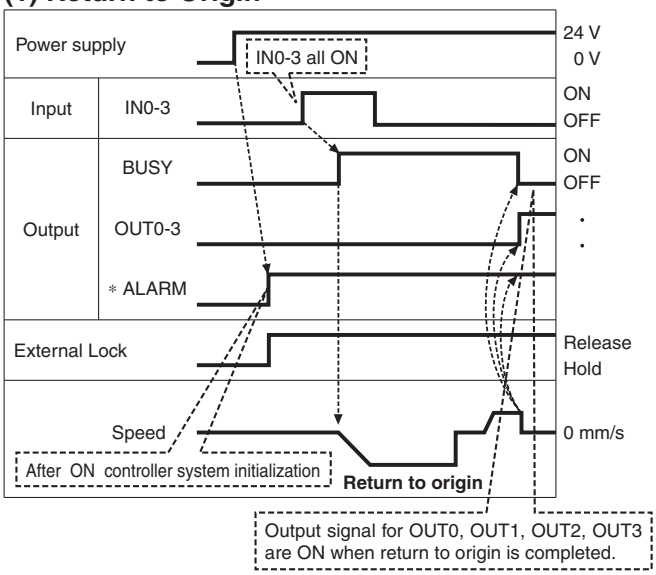

∗ "∗ALARM" is expressed as negative-logic circuit.

(2) Positioning Operation

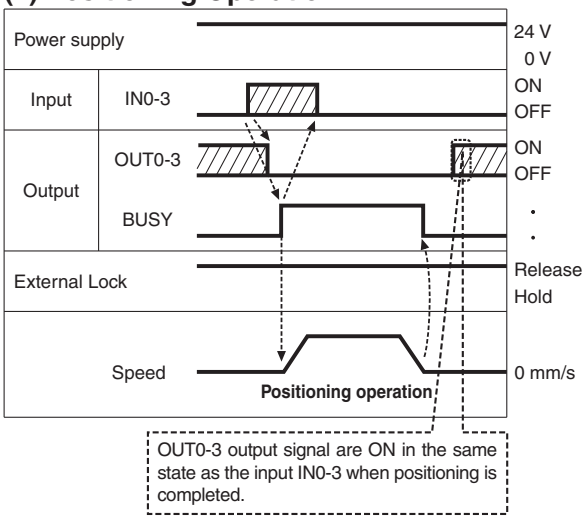

(3) Cut-off Stop (Reset Stop)

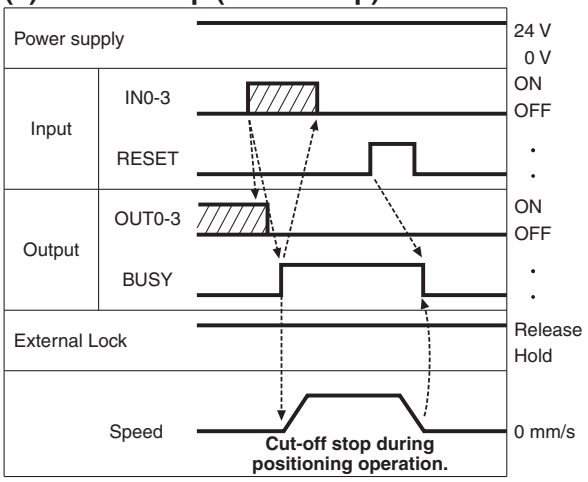

(4) Stop by The STOP Signal

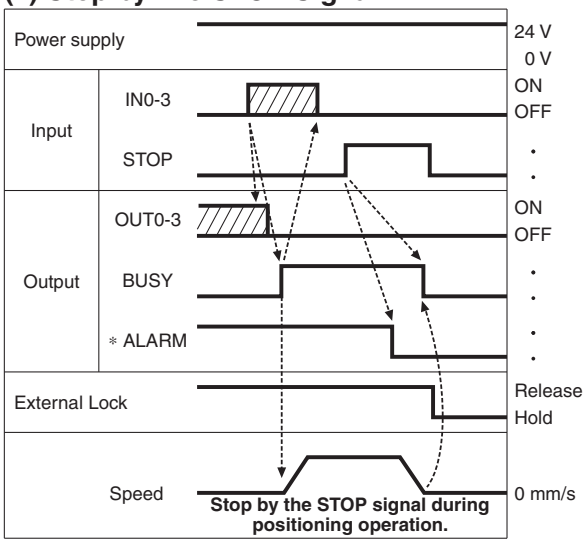

(5) Alarm Reset

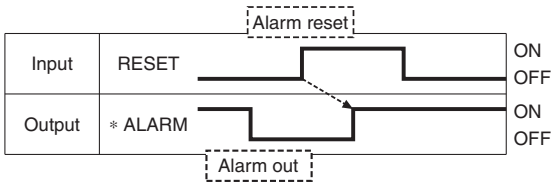

∗ "∗ALARM" is expressed as negative-logic circuit.

Options: Actuator Cable

(mm)

[Robotic cable for step motor (Servo/24 VDC), standard cable]

LE – CP – 1 – ☐

Cable length (L)[m]

1	1.5
3	3
5	5
8	8*
A	10*
B	15*
C	20*

* Produced upon receipt of order (Robotic cable only)

Cable type

Nil	Robotic cable (Flexible cable)
S	Standard cable

LE-CP-$^{1}_{3}$$_{5}$/Cable length: 1.5 m, 3 m, 5 m

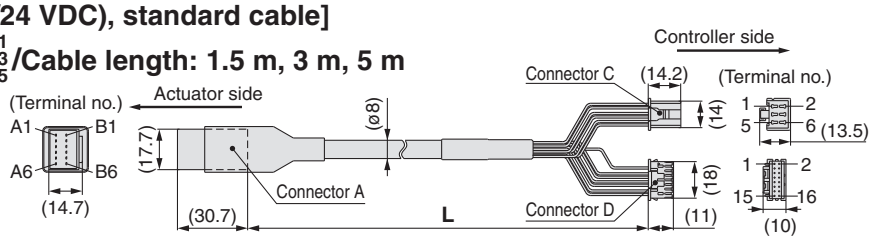

LE-CP-$^{8}_{A}$$^{B}_{C}$/Cable length: 8 m, 10 m, 15 m, 20 m
(* Produced upon receipt of order)

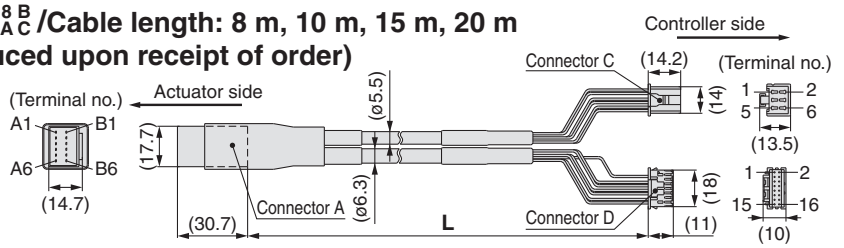

Circuit	Connector A terminal no.
A	B-1
$\overline{A}$	A-1
B	B-2
$\overline{B}$	A-2
COM-A/COM	B-3
COM-B/–	A-3
Vcc	B-4
GND	A-4
$\overline{A}$	B-5
A	A-5
$\overline{B}$	B-6
B	A-6

Shield

Cable color	Connector C terminal no.
Brown	2
Red	1
Orange	6
Yellow	5
Green	3
Blue	4

Cable color	Connector D terminal no.
Brown	12
Black	13
Red	7
Black	6
Orange	9
Black	8
—	3

[Robotic cable with lock and sensor for step motor (Servo/24 VDC), standard cable]

LE – CP – 1 – B – ☐

Cable length (L)[m]

1	1.5
3	3
5	5
8	8*
A	10*
B	15*
C	20*

* Produced upon receipt of order (Robotic cable only)

With lock and sensor

Cable type

Nil	Robotic cable (Flexible cable)
S	Standard cable

LE-CP-$^{1}_{3}$$_{5}$/Cable length: 1.5 m, 3 m, 5 m

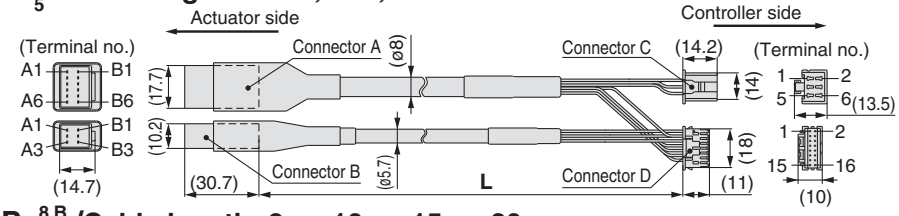

LE-CP-$^{8}_{A}$$^{B}_{C}$/Cable length: 8 m, 10 m, 15 m, 20 m
(* Produced upon receipt of order)

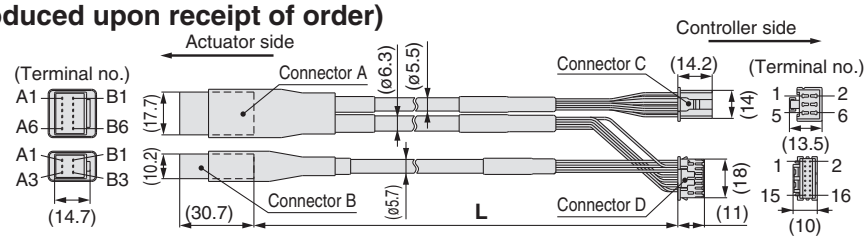

Circuit	Connector A terminal no.
A	B-1
$\overline{A}$	A-1
B	B-2
$\overline{B}$	A-2
COM-A/COM	B-3
COM-B/–	A-3
Vcc	B-4
GND	A-4
$\overline{A}$	B-5
A	A-5
$\overline{B}$	B-6
B	A-6

Shield

Cable color	Connector C terminal no.
Brown	2
Red	1
Orange	6
Yellow	5
Green	3
Blue	4

Cable color	Connector D terminal no.
Brown	12
Black	13
Red	7
Black	6
Orange	9
Black	8
—	3

Circuit	Connector B terminal no.
Lock (+)	B-1
Lock (–)	A-1
Sensor (+) Note)	B-3
Sensor (–) Note)	A-3

Cable color	Connector D terminal no.
Red	4
Black	5
Brown	1
Blue	2

Note) This is not used for the LEF series.

Options

(mm)

[Power supply cable]

LEC – CK1 – 1

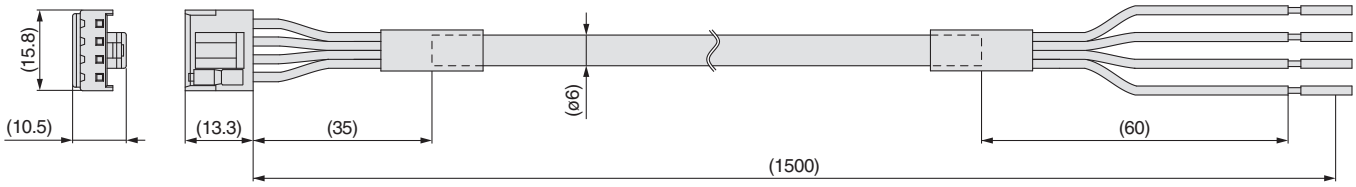

Terminal name	Covered color	Function
0V	Blue	Common supply (–)
M24V	White	Motor power supply (+)
C24V	Brown	Control power supply (+)
BK RLS	Black	Lock release (+)

∗ Conductor size: AWG20

[I/O cable]

LEC – CK4 – □

Cable length (L)[m]

1	1.5
3	3
5	5

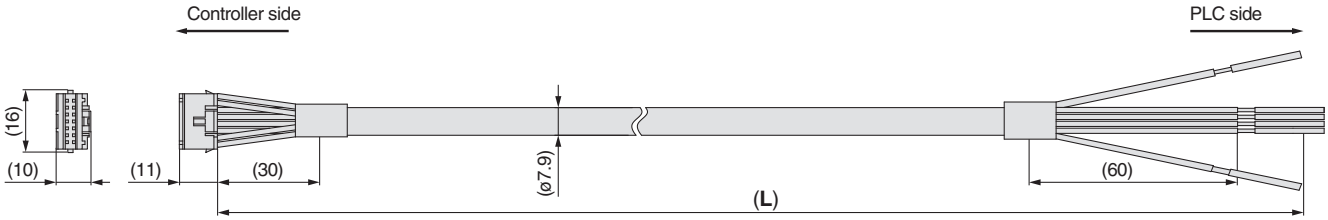

∗ Conductor size: AWG26

Terminal no.	Insulation color	Dot mark	Dot color	Function
1	Light brown	■	Black	COM +
2	Light brown	■	Red	COM –
3	Yellow	■	Black	OUT0
4	Yellow	■	Red	OUT1
5	Light green	■	Black	OUT2
6	Light green	■	Red	OUT3
7	Gray	■	Black	BUSY
8	Gray	■	Red	ALARM
9	White	■	Black	IN0
10	White	■	Red	IN1
11	Light brown	■ ■	Black	IN2
12	Light brown	■ ■	Red	IN3
13	Yellow	■ ■	Black	RESET
14	Yellow	■ ■	Red	STOP

∗ Parallel I/O signal is valid in auto mode. While the test function operates at manual mode, only the output is valid.

AC Servo Motor Controller (Pulse Input Type)

Incremental Type
Series ***LECSA***

Absolute Type
Series ***LECSB***

Incremental encoder compatible ***Series LECSA***

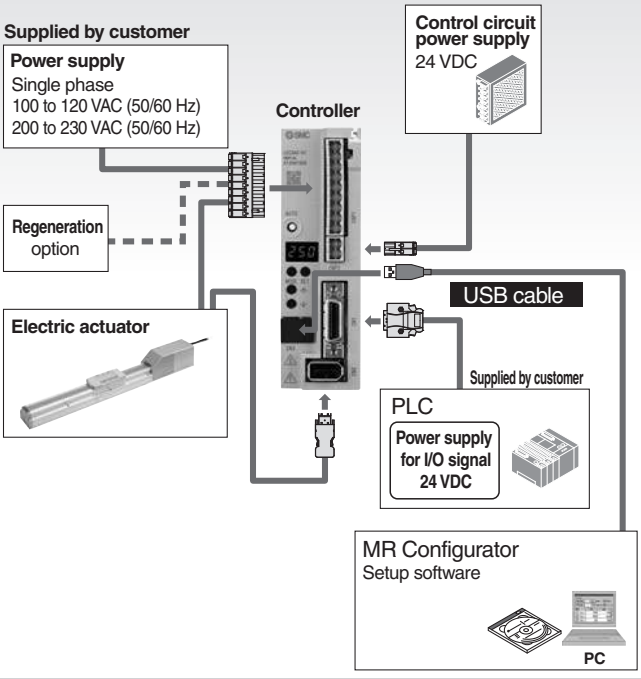

Absolute encoder compatible ***Series LECSB***

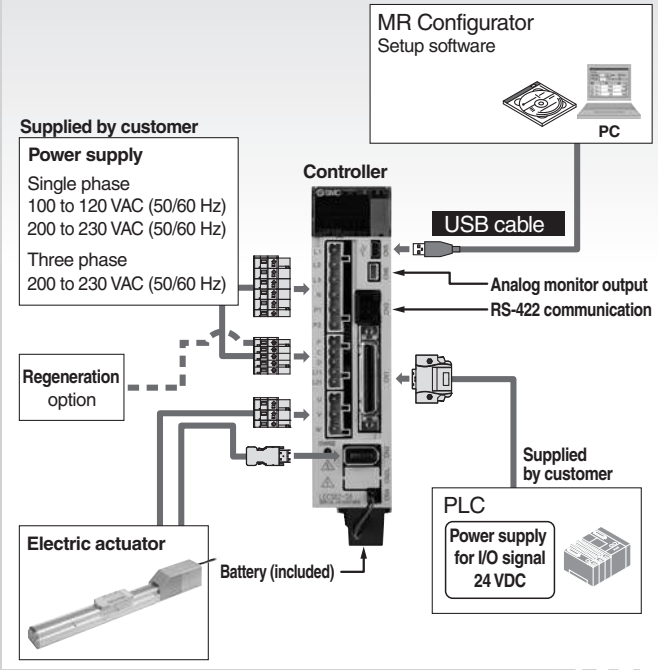

AC Servo Motor Controller (Pulse Input Type)

Incremental Type
Series LECSA
Absolute Type
Series LECSB

How to Order

LECS A 1 – S1

Controller type

A	Pulse input type (For incremental encoder)
B	Pulse input type (For absolute encoder)

Power supply voltage

1	100 to 120 VAC, 50/60 Hz
2	200 to 230 VAC, 50/60 Hz

Motor type

Symbol	Type	Capacity	Encoder
S1	AC servo motor (S2)	100 W	Incremental
S3	AC servo motor (S3)	200 W	
S4	AC servo motor (S4)	400 W	
S5	AC servo motor (S6)	100 W	Absolute
S7	AC servo motor (S7)	200 W	
S8	AC servo motor (S8)	400 W	

Part no. list Select controller type and compatible motor from the combinations in the table below.

Controller part no.	Controller type	Motor type	Power supply voltage
LECSA1-S1	Pulse input type (For incremental encoder)	AC servo motor (S2)	100 to 120 VAC 50/60 Hz
LECSA1-S3		AC servo motor (S3)	
LECSA2-S1		AC servo motor (S2)	200 to 230 VAC 50/60 Hz
LECSA2-S3		AC servo motor (S3)	
LECSA2-S4		AC servo motor (S4)	
LECSB1-S5	Pulse input type (For absolute encoder)	AC servo motor (S6)	100 to 120 VAC 50/60 Hz
LECSB1-S7		AC servo motor (S7)	
LECSB2-S5		AC servo motor (S6)	200 to 230 VAC 50/60 Hz
LECSB2-S7		AC servo motor (S7)	
LECSB2-S8		AC servo motor (S8)	

Dimensions

(mm)

LECSA□

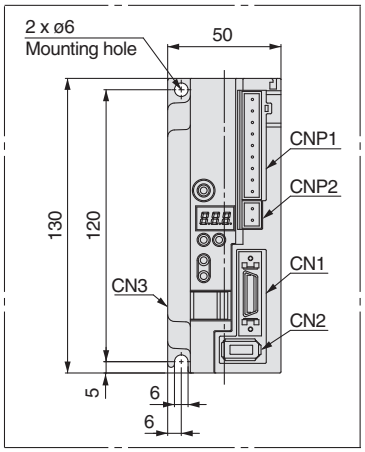

LECSA□-S4

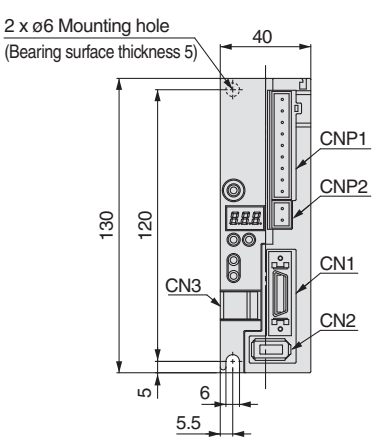

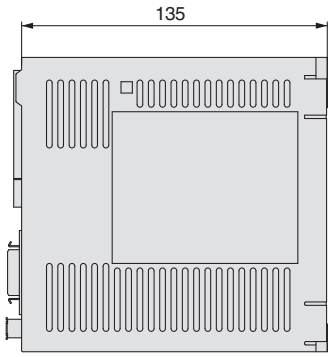

LECSB□

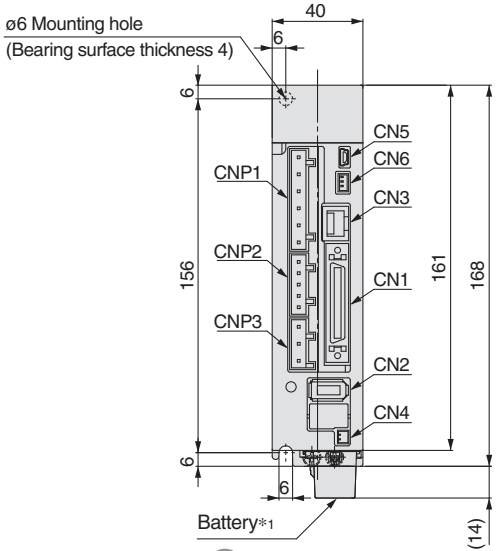

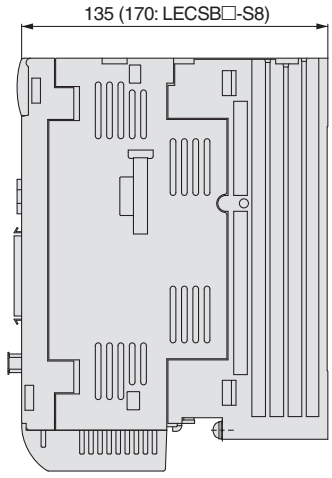

*1 Battery included.

SMC

Specifications

Model		LECSA1-S1	LECSA1-S3	LECSA2-S1	LECSA2-S3	LECSA2-S4
Compatible motor capacity [W]		100	200	100	200	400
Compatible encoder		Incremental 17-bit encoder (Resolution: 131072 p/rev)				
Main power supply	**Power voltage [V]**	Single phase 100 to 120 VAC (50/60 Hz)		Single phase 200 to 230 VAC (50/60 Hz)		
	Allowable voltage range [V]	Single phase 85 to 132 VAC		Single phase 170 to 253 VAC		
	Rated voltage [A]	3.0	5.0	1.5	2.4	4.5
Control power supply	**Control power supply voltage [V]**	24 VDC				
	Allowable voltage range for control power supply [V]	21.6 to 26.4 VDC				
	Rated voltage [A]	0.5				
Parallel input		6 inputs				
Parallel output		4 outputs				
Max. input pulse frequency [pps]		1 M (when differential receiver), 200 k (when open collector)				
Function	**Positioning completion width setting range [pulse]**	0 to ±65535 (Pulse command unit)				
	Error excessive	±3 rotations				
	Torque limit	Parameter setting				
	Communication	USB communication				
Operating temperature range		32 to 104°F (0 to 40°C (No freezing))				
Operating humidity range [%RH]		90 or less (No condensation)				
Storage temperature range		–4 to 149°F (-20 to 65°F (No freezing))				
Storage humidity range [%RH]		90 or less (No condensation)				
Insulation resistance [MΩ]		Between case and SG: 10 (500 VDC)				
Weight		1.32 lbs (600g)				1.5 lbs (700g)

Model		LECSB1-S5	LECSB1-S7	LECSB2-S5	LECSB2-S7	LECSB2-S8
Compatible motor capacity [W]		100	200	100	200	400
Compatible encoder		Absolute 18-bit encoder (Resolution: 262144 p/rev)				
Main power supply	**Power voltage [V]**	Single phase 100 to 120 VAC (50/60 Hz)		Three phase 200 to 230 VAC (50/60 Hz) Single phase 200 to 230 VAC (50/60 Hz)		
	Allowable voltage range [V]	Single phase 85 to 132 VAC		Three phase 170 to 253 VAC Single phase 170 to 253 VAC		
	Rated voltage [A]	3.0	5.0	0.9	1.5	2.6
Control power supply	**Control power supply voltage [V]**	Single phase 100 to 120 VAC (50/60 Hz)		Single phase 200 to 230 VAC (50/60 Hz)		
	Allowable voltage range for control power supply [V]	Single phase 85 to 132 VAC		Single phase 170 to 253 VAC		
	Rated voltage [A]	0.4		0.2		
Parallel input		10 inputs				
Parallel output		6 outputs				
Max. input pulse frequency [pps]		1 M (when differential receiver), 200 k (when open collector)				
Function	**Positioning completion width setting range [pulse]**	0 to ±10000 (Pulse command unit)				
	Error excessive	±3 rotations				
	Torque limit	Parameter setup or external analog input setup (0 to 10 VDC)				
	Communication	USB communication, RS422 communication*1				
Operating temperature range		32 to 104°F (0 to 40°C (No freezing))				
Operating humidity range [%RH]		90 or less (No condensation)				
Storage temperature range		–4 to 149°F (-20 to 65°C (No freezing))				
Storage humidity range [%RH]		90 or less (No condensation)				
Insulation resistance [MΩ]		Between case and SG: 10 (500 VDC)				
Weight		1.76 lbs (800g)				2.2 lbs (1000g)

*1 USB communication and RS422 communication cannot be performed at the same time.

Power Supply Wiring Example: LECSA

LECSA□-□

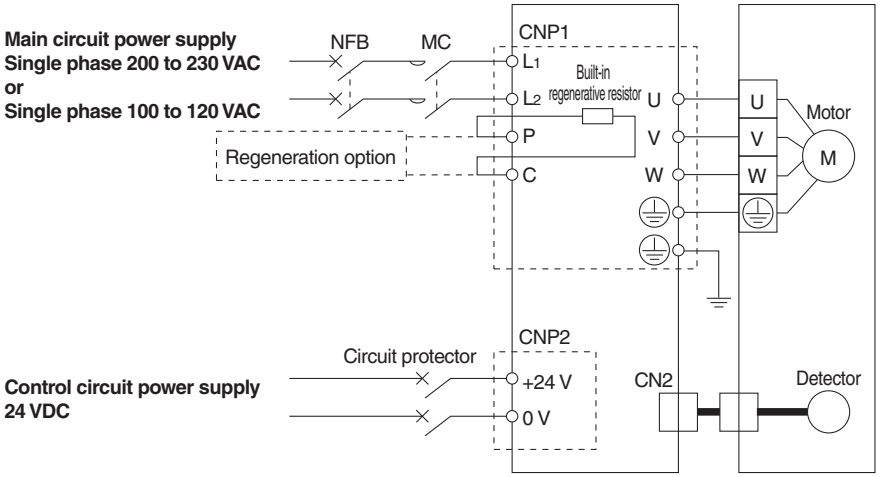

Main Circuit Power Supply Connector: CNP1

∗Accessory

Terminal name	Function	Function details
⏚	Protective earth (PE)	Should be grounded via servo motor's earth terminal and control panel's protective earth (PE) after connecting them.
L1	Main circuit power supply	Connect the main circuit power supply. LECSA1: Single phase 100 to 120 VAC, 50/60 Hz LECSA2: Single phase 200 to 230 VAC, 50/60 Hz
L2		
P	Regeneration option	Terminal to connect regeneration option LECSA□-S1: No need for connection LECSA□-S3, S4: Connected at time of shipping. ∗ If regeneration option is required for "Model Selection", connect to this terminal.
C		
U	Servo motor power (U)	Connect to motor cable (U, V, W)
V	Servo motor power (V)	
W	Servo motor power (W)	

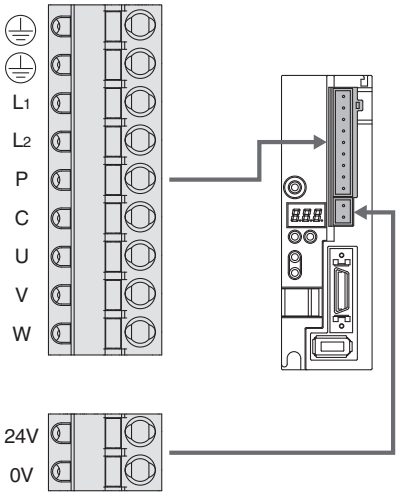

Control Circuit Power Supply Connector: CNP2

∗Accessory

Terminal name	Function	Function details
24V	Control circuit power supply (24V)	24V side of the control circuit power supply (24 VDC) which supplies the controller.
0V	Control circuit power supply (0V)	0V side of the control circuit power supply (24 VDC) which supplies the controller.

Power Supply Wiring Example: LECSB

LECSB1-□

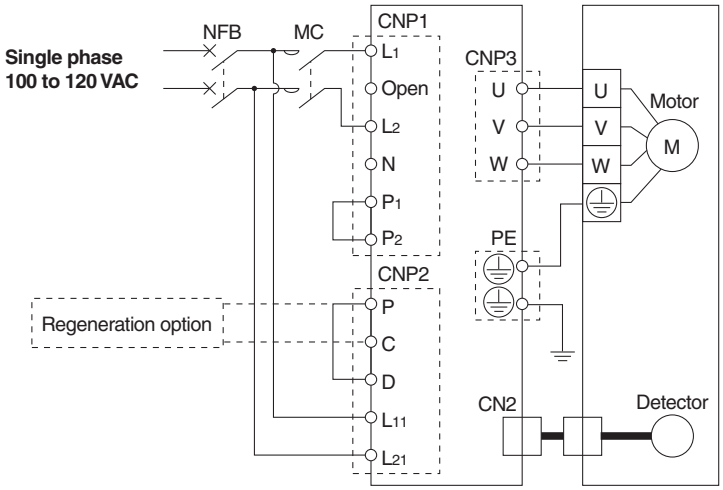

LECSB2-□

For three phase 200 VAC

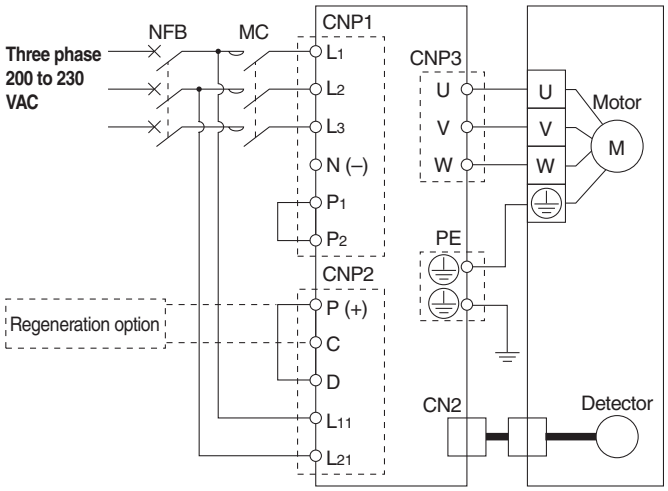

For single phase 200 VAC

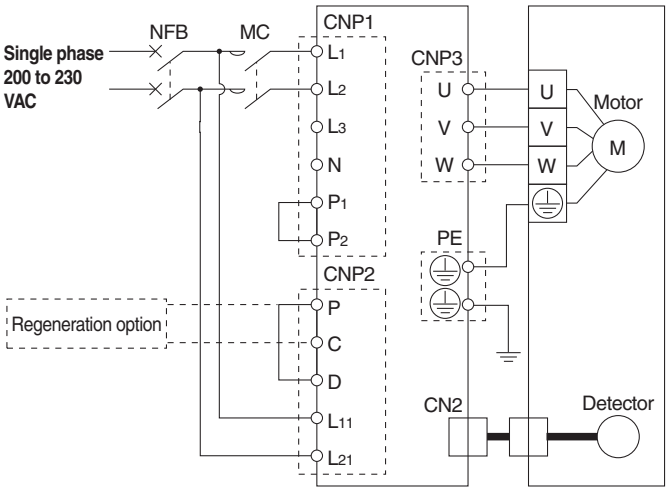

Note) For single phase 200 to 230 VAC, power supply should be connected to L_1 and L_2 terminals, with nothing connected to L_3.

Main Circuit Power Supply Connector: CNP1

∗Accessory

Terminal name	Function	Function details
L_1	Main circuit power supply	Connect the main circuit power supply. LECSB1: Single phase 100 to 120 VAC, 50/60 Hz Connection terminal: L_1,L_2 LECSB2: Single phase 200 to 230 VAC, 50/60 Hz Connection terminal: L_1,L_2 Three phase 200 to 230 VAC, 50/60 Hz Connection terminal: L_1,L_2,L_3
L_2		
L_3		
N	Regenerative converter	Do not connect.
P_1	DC reactor	Connect between P_1 and P_2. (Connected at time of shipping.)
P_2		

Control Circuit Power Supply Connector: CNP2

∗Accessory

Terminal name	Function	Function details
P	Regeneration option	Connect between P and D. (Connected at time of shipping.) ∗ If regeneration option is required for "Model Selection", connect to this terminal.
C		
D		
L_{11}	Control circuit power supply (24 V)	24V side of the control circuit power supply (24 VDC) which supplies the controller.
L_{21}	Control circuit power supply (0 V)	0V side of the control circuit power supply (24 VDC) which supplies the controller.

Motor Connector: CNP3

∗Accessory

Terminal name	Function	Function details
U	Servo motor power (U)	Connect to motor cable (U, V, W)
V	Servo motor power (V)	
W	Servo motor power (W)	

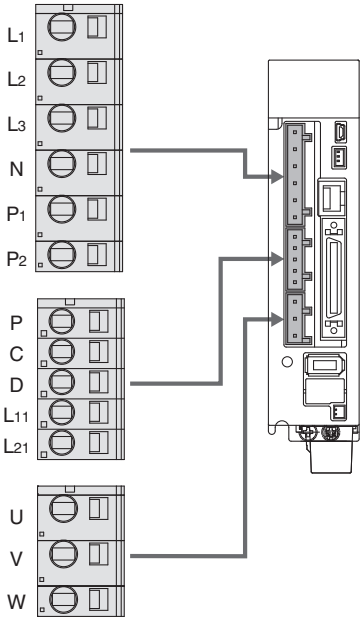

Control Signal Wiring Example: LECSA

LECSA□-□

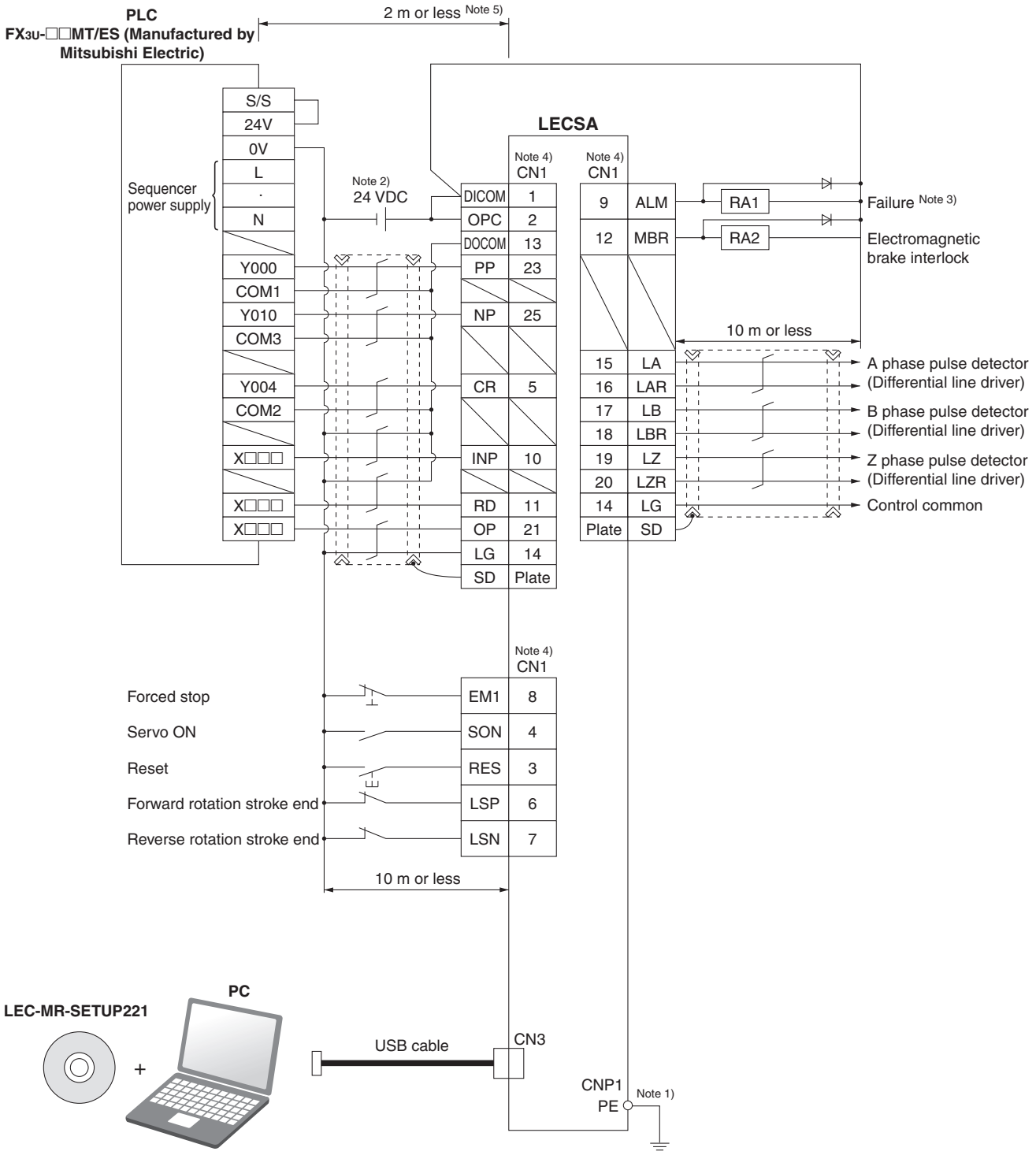

Note 1) For preventing electric shock, be sure to connect the main circuit power supply connector for the servo amplifier (CNP1)'s protective earth (PE) terminal to the control panel's protective earth (PE).
Note 2) For interface use, supply 24 VDC ±10% 200 mA using an external source. 200 mA is the value when all I/O command signals are used and reducing the number of inputs/outputs can decrease current capacity. Refer to "Operation Manual" for required current for interface.
Note 3) The failure (ALM) is ON during normal conditions. When it is OFF (alarm occurs), stop the sequencer signal using the sequence program.
Note 4) The same name signals are connected inside the servo amplifier.
Note 5) For command pulse input with an open collector method. When a positioning unit loaded with a differential line driver method is used, it is 10 m or less.

Control Signal Wiring Example: LECSB

LECSB□-□

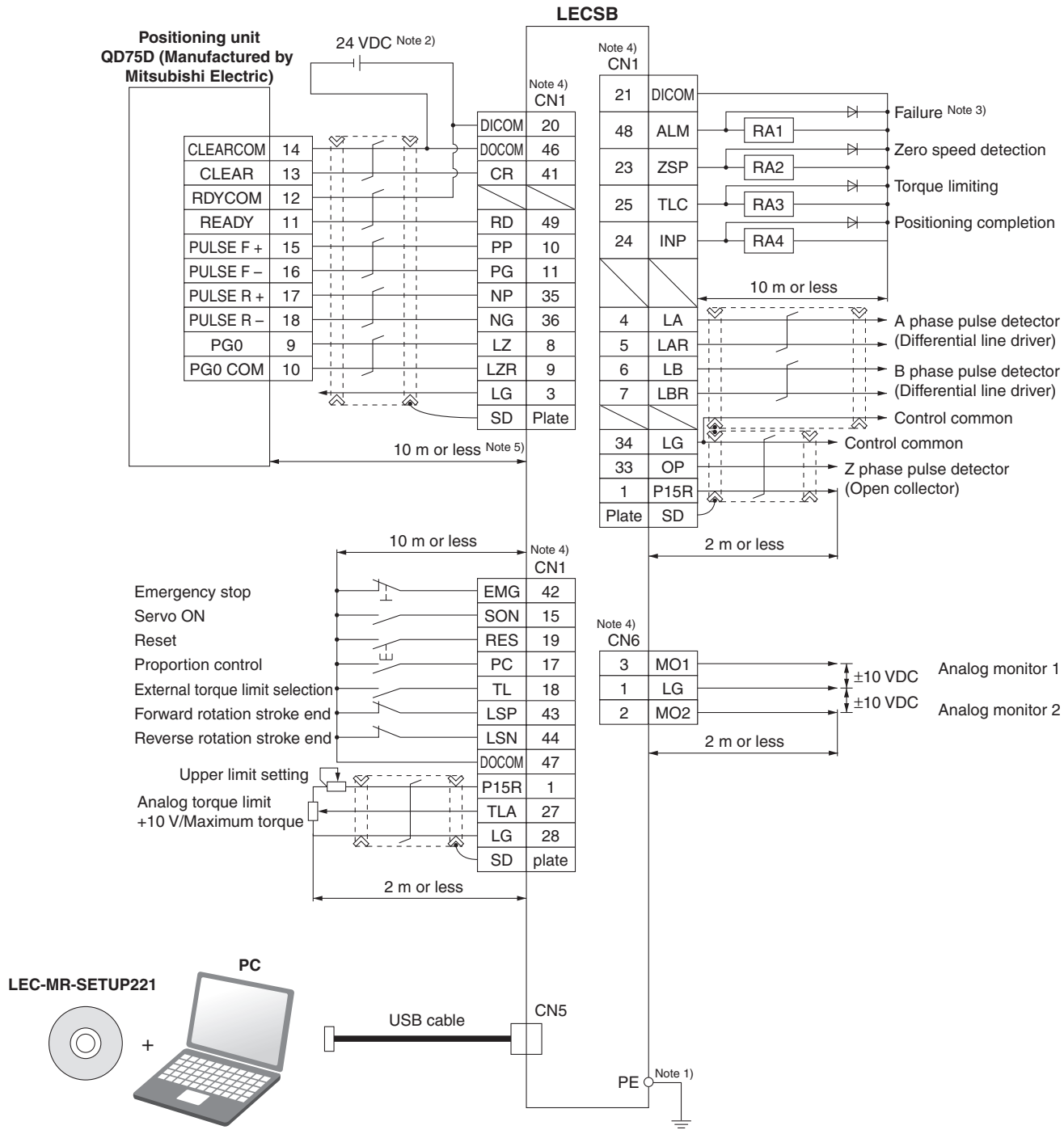

Note 1) For preventing electric shock, be sure to connect the servo amplifier's protective earth (PE) terminal to the control panel's protective earth (PE).
Note 2) For interface use, supply 24 VDC ±10% 300 mA using an external source.
Note 3) The failure (ALM) is ON during normal conditions. When it is OFF (alarm occurs), stop the sequencer signal using the sequence program.
Note 4) The same name signals are connected inside the servo amplifier.
Note 5) For command pulse input with a differential line driver method. For open collector method, it is 2 m or less.

Options

(mm)

Motor cable, Lock cable, Encoder cable

LE − CS M − S 5 A

Motor type

S	AC servo motor

Direction of connector

A	Axis side
B	Counter axis side

Cable contents

M	Motor cable
B	Lock cable
E	Encoder cable

Cable length (L) [m]

2	2
5	5
A	10

Cable type

S	Standard cable
R	Robotic cable

LE-CSM-□□: Motor cable

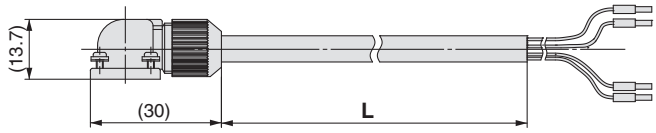

LE-CSB-□□: Lock cable

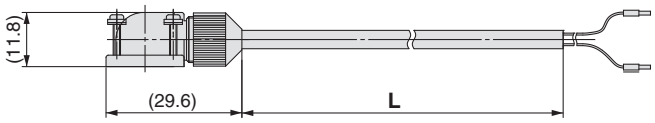

LE-CSE-□□: Encoder cable

I/O connector

LE − C SNA

Controller type

SNA	I/O connector (**LECSA□**)
SNB	I/O connector (**LECSB□**)

LE-CSNA

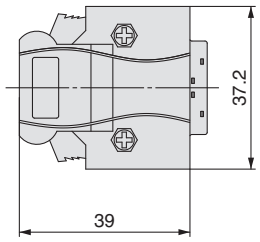

LE-CSNB

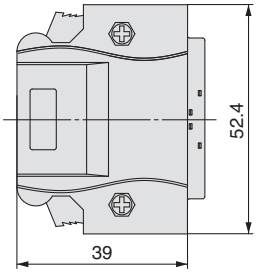

Regeneration option

LEC − MR − RB − □

Regeneration option type

032	Allowable regenerative power 30 W
12	Allowable regenerative power 100 W

∗ Confirm regeneration option to be used in “Model Selection”.

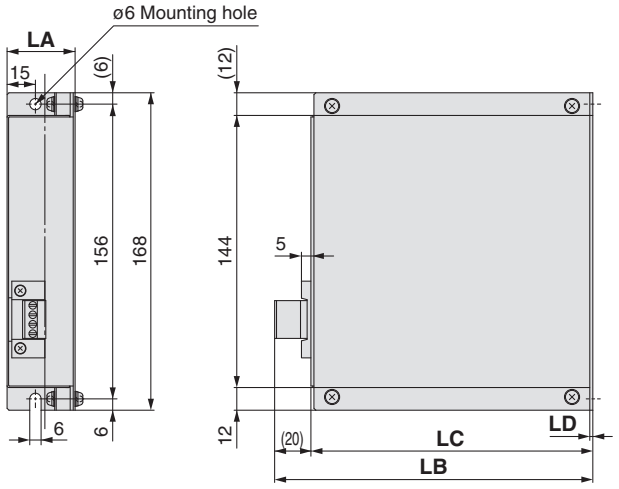

Dimensions [mm]

Model	LA	LB	LC	LD
LEC-MR-RB-032	30	119	99	1.6
LEC-MR-RB-12	40	169	149	2

Options

MR Configurator (setup software Japanese version)

LEC − MR − SETUP221

∗ MRZJW3-SETUP221 manufactured by Mitsubishi Electric.
Refer to Mitsubishi Electric's website for operating environment and update information.

Compatible PC

When using MR Configurator (setup software), use an IBM PC/AT compatible PC that meets the following operating conditions.

Hardware Requirements

Equipment		MR Configurator (setup software) **LEC-MR-SETUP221**
Note 1) Note 2) Note 3) PC	OS	Windows®98, Windows®Me, Windows®2000 Professional, Windows®XP Professional/Home Edition, Windows Vista® Home Basic/Home Premium, Business/Ultimate/Enterprise Windows®7 Starter/Home Premium/Professional/ Ultimate/Enterprise IBM PC/AT compatible PC (Japanese version)
	Available HD space	130 MB or more
	Communication interface	Use USB port
Display		Resolution 1024 x 768 or more Must be capable of high color (16 bits) display. The connectable with the above PC
Keyboard		The connectable with the above PC
Mouse		The connectable with the above PC
Printer		The connectable with the above PC
Communication cable		LEC-MR-J3USB

Note 1) Windows, Windows Vista, Windows 7 are registered trademarks of Microsoft Corporation in the United States and/or other countries.
Note 2) This software may not run correctly depending on the PC that you are using.
Note 3) Not compatible with 64-bit Windows® XP and 64-bit Windows Vista®.

For MR Configurator (setup software English version), contact your nearest sales branch.

USB cable (3 m) for setup software

LEC − MR − J3USB

Battery

LEC − MR − J3BAT

Series LECSA/LECSB
Specific Product Precautions 1

Be sure to read before handling. Refer to back cover for Safety Instructions and the Operation Manual for Electric Actuator Precautions.
Please download it via our website. http://www.smcworld.com

Design/Selection

⚠Warning

1. Be sure to apply the specified voltage.
Otherwise, malfunction and breakage may be caused. If the applied voltage is lower than the specified, it is possible that the load cannot be moved due to an internal voltage drop of the controller. Please check the operating voltage before use.

2. Do not operate the product beyond the specifications.
Otherwise, a fire, malfunction or actuator damage can result. Please check the specifications before use.

3. Install an emergency stop circuit outside of the enclosure.
Please install an emergency stop outside of the enclosure so that it can stop the system operation immediately and intercept the power supply.

4. In order to prevent damage due to the breakdown and the malfunction of the controller and its peripheral devices, a backup system should be established previously by giving a multiple-layered structure or a fail-safe design to the equipment, etc.

5. If a danger against the personnel is expected due to an abnormal heat generation, smoking, ignition, etc., of the controller and its peripheral devices, cut off the power supply for the product and the system immediately.

Handling

⚠Warning

1. Do not touch the inside of the controller and its peripheral devices.
It may cause an electric shock or damage to the controller.

2. Do not perform the operation or setting of the product with wet hands.
It may cause an electric shock.

3. Product with damage or the one lacking of any components should not be used.
It may cause an electric shock, fire, or injury.

4. Use only the specified combination between the electric actuator and controller.
It may cause damage to the actuator or the controller.

5. Be careful not to be caught or hit by the workpiece while the actuator is moving.
It may cause an injury.

6. Do not connect the power supply or power on the product before confirming the area to which the workpiece moves is safe.
The movement of the workpiece may cause an accident.

7. Do not touch the product when it is energized and for some time after power has been disconnected, as it is very hot.
It may lead to a burn due to the high temperature.

8. Check the voltage using a tester for more than 5 minutes after power-off in case of installation, wiring and maintenance.
It may cause an electric shock, fire, or injury.

Handling

⚠Warning

9. Static electricity may cause malfunction or break the controller. Do not touch the controller while power is supplied.
When touching the controller for maintenance, take sufficient measures to eliminate static electricity.

10. Do not use the product in an area where dust, powder dust, water, chemicals or oil is in the air.
It will cause failure or malfunction.

11. Do not use the product in an area where a magnetic field is generated.
It will cause failure or malfunction.

12.Do not install the product in the environment of flammable gas, explosive gas and corrosive gas.
It could lead to fire, explosion and corrosion.

13. Radiant heat from strong heat supplies such as a furnace, direct sunlight, etc., should not be applied to the product.
It will cause failure of the controller or its peripheral devices.

14. Do not use the product in an environment subject to a temperature cycle.
It will cause failure of the controller or its peripheral devices.

15. Do not use the product in a place where surges are generated.
When there are units that generate a large amount of surge around the product (e.g., solenoid type lifters, high frequency induction furnaces, motors, etc.), this may cause deterioration or damage to the product's internal circuit. Avoid supplies of surge generation and crossed lines.

16. Do not install the product in an environment under the effect of vibrations and impacts.
It will cause failure or malfunction.

17. When a surge generating load such as a relay or solenoid valve is directly driven, use a product that incorporates a surge absorption element.

Installation

⚠Warning

1. Install the controller and its peripheral devices on a fireproof material.
A direct installation on or near a flammable material may cause fire.

2. Do not install the product in a place subject to vibrations and impacts.
It will cause failure or malfunction.

3. The controller should be affixed verticallyto a vertical wall.
Do not cover the controller's exhaust opening.

4. Install the controller and its peripheral devices on a flat surface.
If the mounting surface is distorted or not flat, an unacceptable force may be added to the housing, etc., to cause troubles.

Series LECSA/LECSB
Specific Product Precautions 2

Be sure to read before handling. Refer to back cover for Safety Instructions and the Operation Manual for Electric Actuator Precautions.
Please download it via our website. http://www.smcworld.com

Power Supply

⚠Caution

1. Use a power supply that has low noise between lines and between power and ground.
In cases where noise is high, an isolation transformer should be used.

2. To prevent surges from lightning, an appropriate measure should be taken. Ground the surge absorber for lightning separately from the grounding of the controller and its peripheral devices.

Wiring

⚠Warning

1. The controller will be damaged if a commercial power supply (100V/200V) is added to the controller's servo motor power (U, V, W). Be sure to check wiring such as wiring mistakes when the power supply is turned on.

2. Connect the ends of the U, V, W wires from the motor cable correctly to the phases (U, V, W) of the servo motor power.
If these wires do not match up, it is unable to control the servo motor.

Grounding

⚠Warning

1. Be sure to carry out grounding in order to ensure the noise tolerance.
For grounding actuator, connect the copper wire of the actuator to the controller's protective earth (PE) terminal and connect the copper wire of the controller to the earth via the control panel's protective earth (PE) terminal. Do not connect them directly to the control panel's protective earth (PE) terminal.

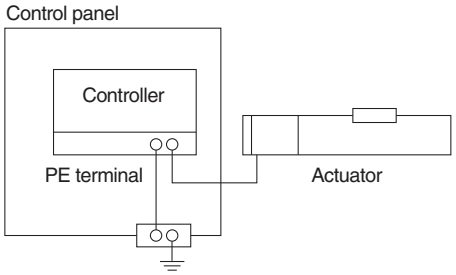

2. In the unlikely event that malfunction is caused by ground, please disconnect the unit from ground.

Maintenance

⚠Warning

1. Perform a maintenance check periodically.
Confirm wiring and screws are not loose.
Loose screws or wires may cause unintentional malfunction.

2. Conduct an appropriate functional inspection after completing the maintenance.
At times where the equipment or machinery does not operate properly, conduct an emergency stop of the system. Otherwise, an unexpected malfunction may occur and it will become impossible to secure the safety. Conduct a test of the emergency stop in order to confirm the safety of the equipment.

3. Do not disassemble, modify or repair the controller and its peripheral devices.

4. Do not put anything conductive or flammable inside of the controller.
It may cause a fire.

5. Do not conduct an insulation resistance test and withstand voltage test on this product.

6. Ensure sufficient space for maintenance activities.
Design the system that allows required space for maintenance.

SMC Information

SMC Corporation of America/www.smcusa.com
SMC Pneumatics (Canada) Ltd./www.smcpneumatics.ca
(800) SMC.SMC1 (762-7621)
e-mail: sales@smcusa.com
For International inquires: www.smcworld.com
©2012 SMC Corporation All Rights Reserved
11-E597
QT-RRD-5M

AC Servo Motor Driver
Series LECS□

Power Supply Voltage
100 to 120 VAC
200 to 230 VAC

Motor Capacity
100/200/400 W

CE
RoHS

Incremental Type

Series LECSA (Pulse Input Type/Positioning Type)

- **Up to 7 positioning points by point table**
- **Input type:** Pulse input
- **Control encoder:** Incremental 17-bit encoder (Resolution: 131072 pulse/rev)
- **Parallel input:** 6 inputs
  output: 4 outputs

Absolute Type

Series LECSB (Pulse Input Type)

- **Input type:** Pulse input
- **Control encoder:** Absolute 18-bit encoder (Resolution: 262144 pulse/rev)
- **Parallel input:** 10 inputs
  output: 6 outputs

Series LECSC (CC-Link Direct Input Type)

CC-Link

- **Position data/speed data setting and operation start/stop**
- **Positioning by up to 255 point tables (when 2 stations occupied)**
- **Up to 32 drivers connectable (when 2 stations occupied) with CC-Link communication**
- **Applicable Fieldbus protocol:** CC-Link (Ver. 1.10, max. communication speed: 10 Mbps)
- **Control encoder:** Absolute 18-bit encoder (Resolution: 262144 pulse/rev)

Series LECSS (SSCNET III Type)

- **Compatible with Mitsubishi Electric's servo system**
- **Reduced wiring and SSCNET III optical cable for one-touch connection**
- **SSCNET III optical cable provides enhanced noise resistance**
- **Up to 16 drivers connectable with SSCNET III communication**
- **Applicable Fieldbus protocol:** SSCNET III
  (High-speed optical communication, max. bidirectional communication speed: 100 Mbps)
- **Control encoder:** Absolute 18-bit encoder (Resolution: 262144 pulse/rev)

System Construction

Incremental encoder compatible *Series* LECSA
(Pulse input type/Positioning type)

Supplied by customer

Power supply
Single phase 100 to 120 VAC (50/60 Hz)
200 to 230 VAC (50/60 Hz)

◎Option **Page 15**
Regeneration option
Part no.: **LEC-MR-RB-□**

Main circuit power supply connector **Page 9**
(Accessory)

Driver

Supplied by customer
Control circuit power supply
24 VDC

Control circuit power supply connector **Page 9**
(Accessory)

◎Option
Setup software **Page 16**
(MR Configurator™)
Part no.: **LEC-MR-SETUP221□**

PC

∗ Order USB cable (Part no.: LEC-MR-J3USB) separately to use this software.

USB cable **Page 16**
Part no.: **LEC-MR-J3USB**

Motor cable **Page 15**

Standard cable	Robotic cable
LE-CSM-S□□	LE-CSM-R□□

Lock cable **Page 15**

Standard cable	Robotic cable
LE-CSB-S□□	LE-CSB-R□□

Electric actuators
Rod type
Series LEY
Guide rod type/
In-line motor type

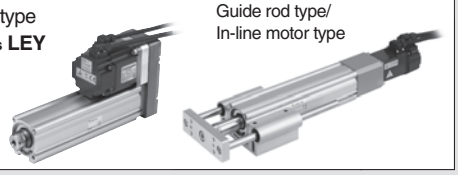

◎Option **Page 15**
I/O connector
Part no.: **LE-CSNA**

Supplied by customer
PLC (Positioning unit)
Power supply for I/O signal 24 VDC

Encoder cable **Page 15**

Standard cable	Robotic cable
LE-CSE-S□□	LE-CSE-R□□

Absolute encoder compatible *Series* LECSB
(Pulse input type)

Supplied by customer

Power supply
Single phase 100 to 120 VAC (50/60 Hz)
200 to 230 VAC (50/60 Hz)
Three phase 200 to 230 VAC (50/60 Hz)

◎Option **Page 15**
Regeneration option
Part no.: **LEC-MR-RB-□**

Main circuit power supply connector **Page 10**
(Accessory)

Driver

USB cable **Page 16**
Part no.: **LEC-MR-J3USB**

◎Option
Setup software **Page 16**
(MR Configurator™)
Part no.: **LEC-MR-SETUP221□**

PC

∗ Order USB cable (Part no.: LEC-MR-J3USB) separately to use this software.

Analog monitor output

RS-422 communication

Motor cable **Page 15**

Standard cable	Robotic cable
LE-CSM-S□□	LE-CSM-R□□

Lock cable **Page 15**

Standard cable	Robotic cable
LE-CSB-S□□	LE-CSB-R□□

Control circuit power supply connector **Page 10**
(Accessory)

Motor connector **Page 10**
(Accessory)

Electric actuators
Rod type
Series LEY
Guide rod type/
In-line motor type

◎Option **Page 15**
I/O connector
Part no.: **LE-CSNB**

Supplied by customer
PLC (Positioning unit)
Power supply for I/O signal 24 VDC

Encoder cable **Page 15**

Standard cable	Robotic cable
LE-CSE-S□□	LE-CSE-R□□

Battery (Accessory) **Page 16**
Part no.: (**LEC-MR-J3BAT**)

System Construction

Absolute encoder compatible *Series* LECSC
(CC-Link direct input type)

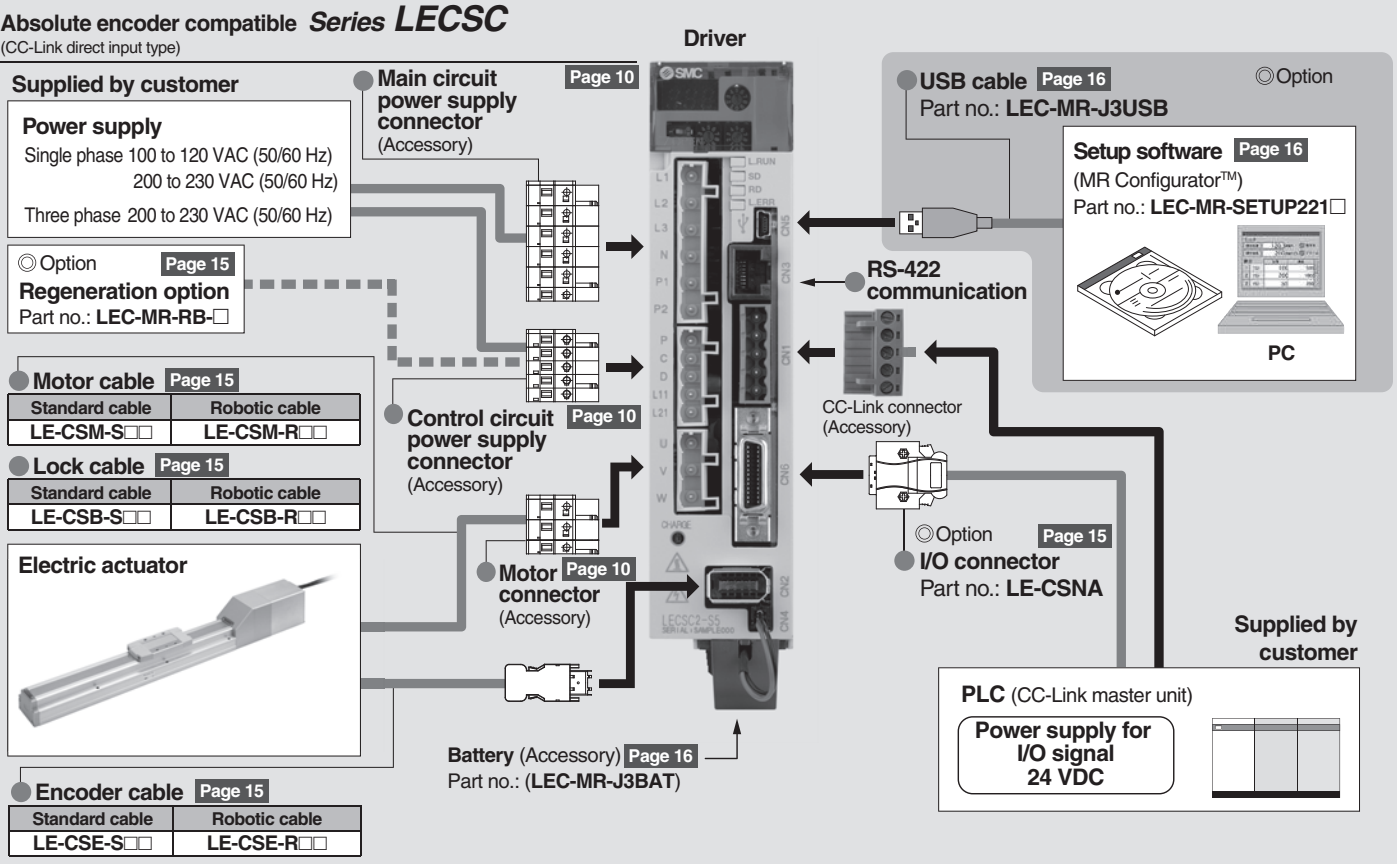

Absolute encoder compatible *Series* LECSS
(SSCNET III type)

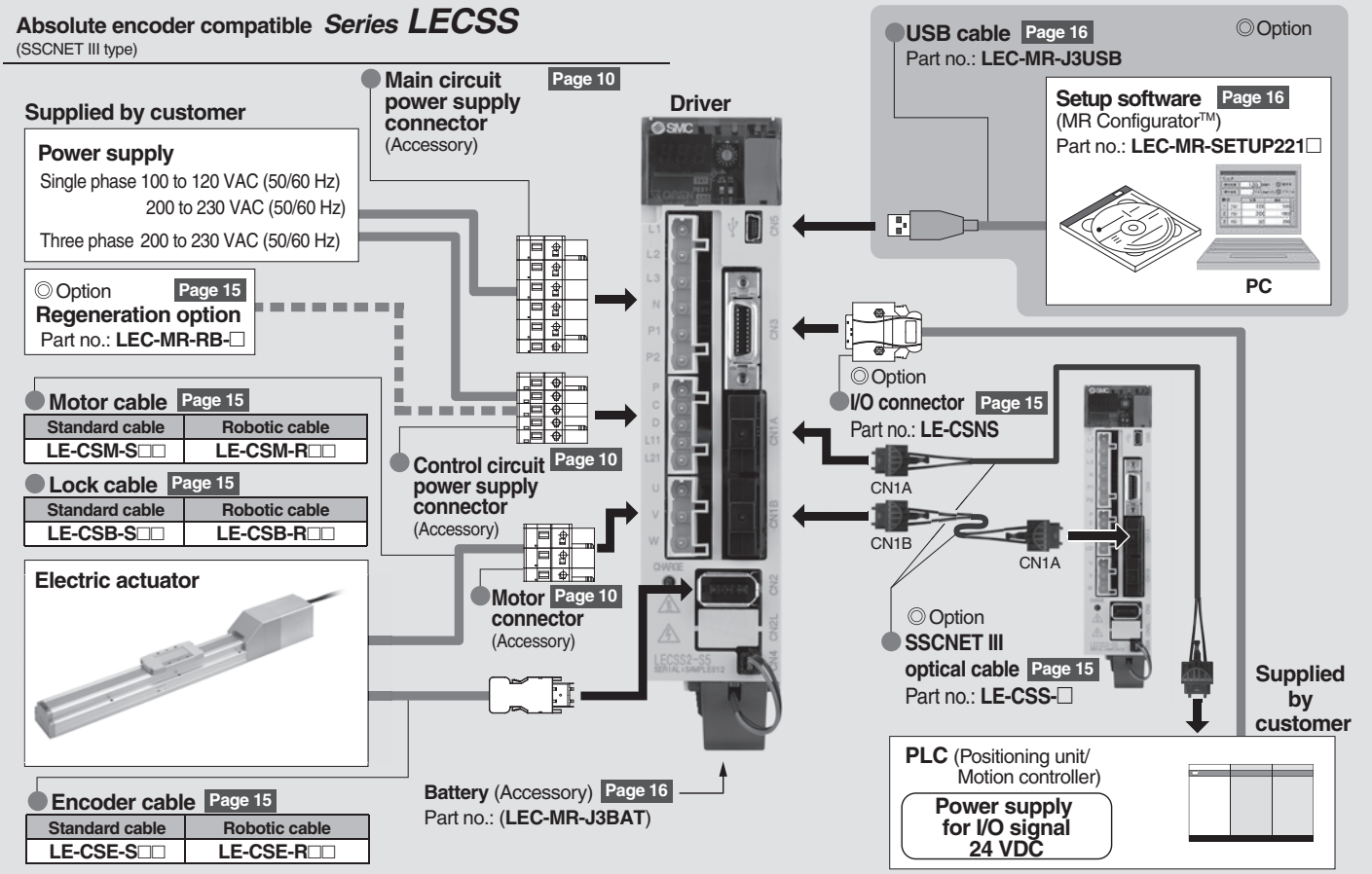

AC Servo Motor Driver
Incremental Type

Series LECSA (Pulse Input Type/Positioning Type)
Absolute Type

Series LECSB/LECSC/LECSS
(Pulse Input Type) (CC-Link Direct Input Type) (SSCNET III Type)

How to Order

Driver

LECS A 1 – S1

Driver type

A	Pulse input type/Positioning type (For incremental encoder)
B	Pulse input type (For absolute encoder)
C	CC-Link direct input type (For absolute encoder)
S	SSCNET III type (For absolute encoder)

Power supply voltage

1	100 to 120 VAC, 50/60 Hz
2	200 to 230 VAC, 50/60 Hz

LECSA LECSB LECSC LECSS

Compatible motor type

Symbol	Type	Capacity	Encoder
S1	AC servo motor (S2)	100 W	Incremental
S3	AC servo motor (S3)	200 W	
S4∗1	AC servo motor (S4)	400 W	
S5	AC servo motor (S6)	100 W	Absolute
S7	AC servo motor (S7)	200 W	
S8∗1	AC servo motor (S8)	400 W	

∗1 Not applicable for Series LEY

Dimensions

LECSA□

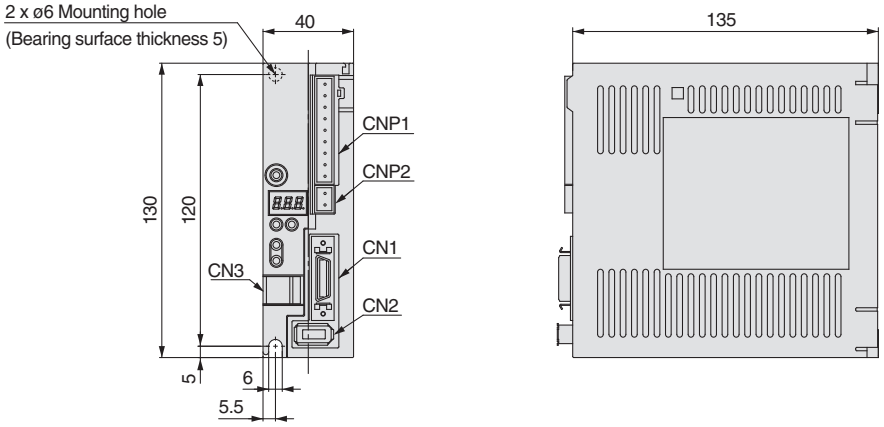

Connector name	Description
CN1	I/O signal connector
CN2	Encoder connector
CN3	USB communication connector
CNP1	Main circuit power supply connector
CNP2	Control circuit power supply connector

LECSB□

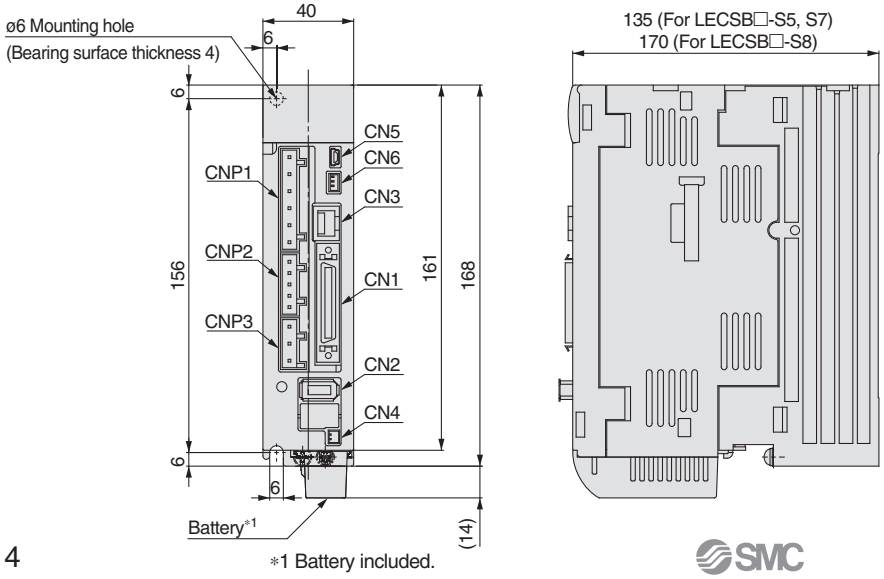

∗1 Battery included.

Connector name	Description
CN1	I/O signal connector
CN2	Encoder connector
CN3	RS-422 communication connector
CN4	Battery connector
CN5	USB communication connector
CN6	Analog monitor connector
CNP1	Main circuit power supply connector
CNP2	Control circuit power supply connector
CNP3	Servo motor power connector

Dimensions

LECSC□

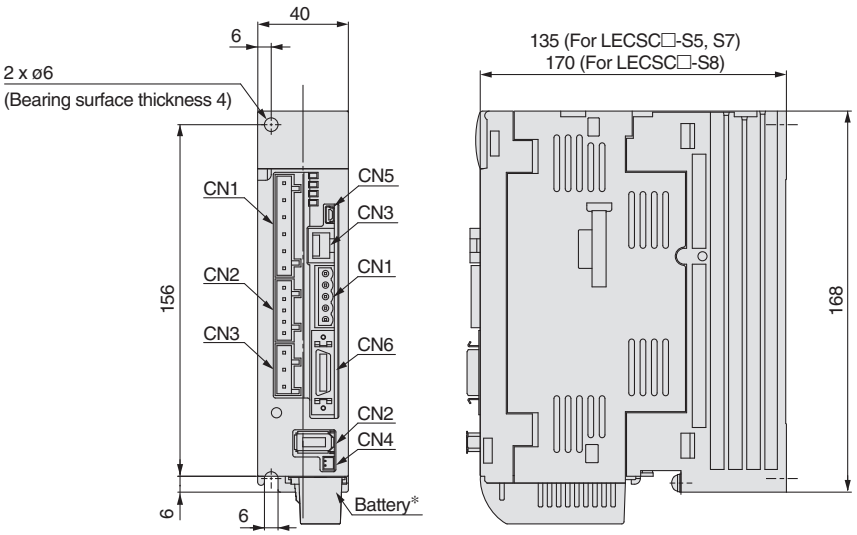

Connector name	Description
CN1	CC-Link connector
CN2	Encoder connector
CN3	RS-422 communication connector
CN4	Battery connector
CN5	USB communication connector
CN6	I/O signal connector
CNP1	Main circuit power supply connector
CNP2	Control circuit power supply connector
CNP3	Servo motor power connector

∗ Battery included.

LECSS□

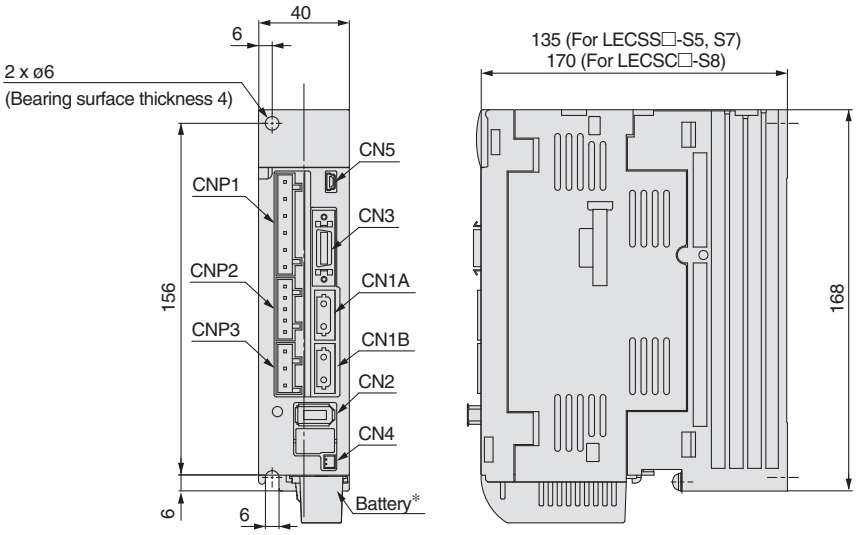

Connector name	Description
CN1A	Front axis connector for SSCNET III optical cable
CN1B	Rear axis connector for SSCNET III optical cable
CN2	Encoder connector
CN3	I/O signal connector
CN4	Battery connector
CN5	USB communication connector
CNP1	Main circuit power supply connector
CNP2	Control circuit power supply connector
CNP3	Servo motor power connector

∗ Battery included.

Specifications

Series LECSA

Model		LECSA1-S1	LECSA1-S3	LECSA2-S1	LECSA2-S3
Compatible motor capacity [W]		100	200	100	200
Compatible encoder		Incremental 17-bit encoder (Resolution: 131072 pulse/rev)			
Main power supply	Power voltage [V]	Single phase 100 to 120 VAC (50/60 Hz)		Single phase 200 to 230 VAC (50/60 Hz)	
	Allowable voltage fluctuation [V]	Single phase 85 to 132 VAC		Single phase 170 to 253 VAC	
	Rated current [A]	3.0	5.0	1.5	2.4
Control power supply	Control power supply voltage [V]	24 VDC			
	Allowable voltage fluctuation [V]	21.6 to 26.4 VDC			
	Rated current [A]	0.5			
Parallel input		6 inputs			
Parallel output		4 outputs			
Max. input pulse frequency [pps]		1 M (when differential receiver), 200 k (when open collector)			
Function	In-position range setting [pulse]	0 to ±65535 (Command pulse unit)			
	Error excessive	±3 rotations			
	Torque limit	Parameter setting			
	Setting communication	USB communication			
Operating temperature range		32 to 131°F (0 to 55°C) (No freezing)			
Operating humidity range [%RH]		90 or less (No condensation)			
Storage temperature range		–4 to 149°F (–20 to 65°C) (No freezing)			
Storage humidity range [%RH]		90 or less (No condensation)			
Insulation resistance [MΩ]		Between case and SG: 10 (500 VDC)			
Weight		21.2 oz (600 g)			

Series LECSB

Model		LECSB1-S5	LECSB1-S7	LECSB2-S5	LECSB2-S7	LECSB2-S8
Compatible motor capacity [W]		100	200	100	200	400
Compatible encoder		Absolute 18-bit encoder (Resolution: 262144 pulse/rev)				
Main power supply	Power voltage [V]	Single phase 100 to 120 VAC (50/60 Hz)		Three phase 200 to 230 VAC (50/60 Hz) Single phase 200 to 230 VAC (50/60 Hz)		
	Allowable voltage fluctuation [V]	Single phase 85 to 132 VAC		Three phase 170 to 253 VAC Single phase 170 to 253 VAC		
	Rated current [A]	3.0	5.0	0.9	1.5	2.6
Control power supply	Control power supply voltage [V]	Single phase 100 to 120 VAC (50/60 Hz)		Single phase 200 to 230 VAC (50/60 Hz)		
	Allowable voltage fluctuation [V]	Single phase 85 to 132 VAC		Single phase 170 to 253 VAC		
	Rated current [A]	0.4		0.2		
Parallel input		10 inputs				
Parallel output		6 outputs				
Max. input pulse frequency [pps]		1 M (when differential receiver), 200 k (when open collector)				
Function	In-position range setting [pulse]	0 to ±10000 (Command pulse unit)				
	Error excessive	±3 rotations				
	Torque limit	Parameter setup or external analog input setup (0 to 10 VDC)				
	Setting communication	USB communication, RS422 communication*1				
Operating temperature range		32 to 131 °F (0 to 55°C) (No freezing)				
Operating humidity range [%RH]		90 or less (No condensation)				
Storage temperature range		–4 to 149°F (–20 to 65°C) (No freezing)				
Storage humidity range [%RH]		90 or less (No condensation)				
Insulation resistance [MΩ]		Between case and SG: 10 (500 VDC)				
Weight		28.2 oz (800 g)				35.3 oz (1000 g)

*1 USB communication and RS422 communication cannot be performed at the same time.

Specifications

Series LECSC

Model			LECSC1-S5	LECSC1-S7	LECSC2-S5	LECSC2-S7	LECSC2-S8
Compatible motor capacity [W]			100	200	100	200	400
Compatible encoder			Absolute 18-bit encoder (Resolution: 262144 pulse/rev)				
Main power supply	**Power voltage [V]**		Single phase 100 to 120 VAC (50/60 Hz)		Three phase 200 to 230 VAC (50/60 Hz) Single phase 200 to 230 VAC (50/60 Hz)		
	Allowable voltage fluctuation [V]		Single phase 85 to 132 VAC		Three phase 170 to 253 VAC Single phase 170 to 253 VAC		
	Rated current [A]		3.0	5.0	0.9	1.5	2.6
Control power supply	**Control power supply voltage [V]**		Single phase 100 to 120 VAC (50/60 Hz)		Single phase 200 to 230 VAC (50/60 Hz)		
	Allowable voltage fluctuation [V]		Single phase 85 to 132 VAC		Single phase 170 to 253 VAC		
	Rated current [A]		0.4		0.2		
Communication specifications	**Applicable Fieldbus protocol (Version)**		CC-Link communication (Ver. 1.10)				
	Connection cable		CC-Link Ver. 1.10 compliant cable (Shielded 3-core twisted pair cable) *1				
	Remote station number		1 to 64				
	Cable length	**Communication speed [bps]**	16 k	625 k	2.5 M	5 M	10 M
		Max. overall cable length [m]	1200	900	400	160	100
		Cable length between stations [m]	0.2 or more				
	I/O occupation area (Inputs/Outputs)		1 station occupied (Remote I/O 32 points/32 points)/(Remote register 4 words/4 words) 2 stations occupied (Remote I/O 64 points/64 points)/(Remote register 8 words/8 words)				
	Number of connectable drivers		Up to 42 (when 1 station is occupied by 1 driver), Up to 32 (when 2 stations are occupied by 1 driver), when there are only remote device stations.				
Command method	**Remote register input**		Available with CC-Link communication (2 stations occupied)				
	Point table No. input		Available with CC-Link communication, RS-422 communication CC-Link communication (1 station occupied): 31 points CC-Link communication (2 stations occupied): 255 points RS-422 communication: 255 points				
	Indexer positioning input		Available with CC-Link communication CC-Link communication (1 station occupied): 31 points CC-Link communication (2 stations occupied): 255 points				
Setting communication			USB communication, RS422 communication *2				
Operating temperature range			32 to 131°F (0 to 55° c) (No freezing)				
Operating humidity range [%RH]			90 or less (No condensation)				
Storage temperature range			–4 to 149°F (–20 to 65°C) (No freezing)				
Storage humidity range [%RH]			90 or less (No condensation)				
Insulation resistance [MΩ]			Between case and SG: 10 (500 VDC)				
Weight			28.2 oz (800 g)				35.3 oz (1000 g)

*1 If the system comprises of both CC-Link Ver. 1.00 and Ver. 1.10 compliant cables, Ver. 1.00 specifications are applied to the cable extensions and the cable length between stations.

*2 USB communication and RS-422 communication cannot be performed at the same time.

Specifications

Series LECSS

Model		LECSS1-S5	LECSS1-S7	LECSS2-S5	LECSS2-S7	LECSS2-S8
Compatible motor capacity [W]		100	200	100	200	400
Compatible encoder		Absolute 18-bit encoder (Resolution: 262144 pulse/rev)				
Main power supply	**Power voltage [V]**	Single phase 100 to 120 VAC (50/60 Hz)		Three phase 200 to 230 VAC (50/60 Hz) Single phase 200 to 230 VAC (50/60 Hz)		
	Allowable voltage fluctuation [V]	Single phase 85 to 132 VAC		Three phase 170 to 253 VAC Single phase 170 to 253 VAC		
	Rated current [A]	3.0	5.0	0.9	1.5	2.6
Control power supply	**Control power supply voltage [V]**	Single phase 100 to 120 VAC (50/60 Hz)		Single phase 200 to 230 VAC (50/60 Hz)		
	Allowable voltage fluctuation [V]	Single phase 85 to 132 VAC		Single phase 170 to 253 VAC		
	Rated current [A]	0.4		0.2		
Applicable Fieldbus protocol		SSCNET III (High-speed optical communication)				
Setting communication		USB communication				
Operating temperature range		32 to 131°F (0 to 55°C) (No freezing)				
Operating humidity range [%RH]		90 or less (No condensation)				
Storage temperature range		–4 to 149°F (–20 to 65°C) (No freezing)				
Storage humidity range [%RH]		90 or less (No condensation)				
Insulation resistance [MΩ]		Between case and SG: 10 (500 VDC)				
Weight		28.2 oz (800 g)				35.3 oz (1000 g)

Power Supply Wiring Example: LECSA

LECSA□-□

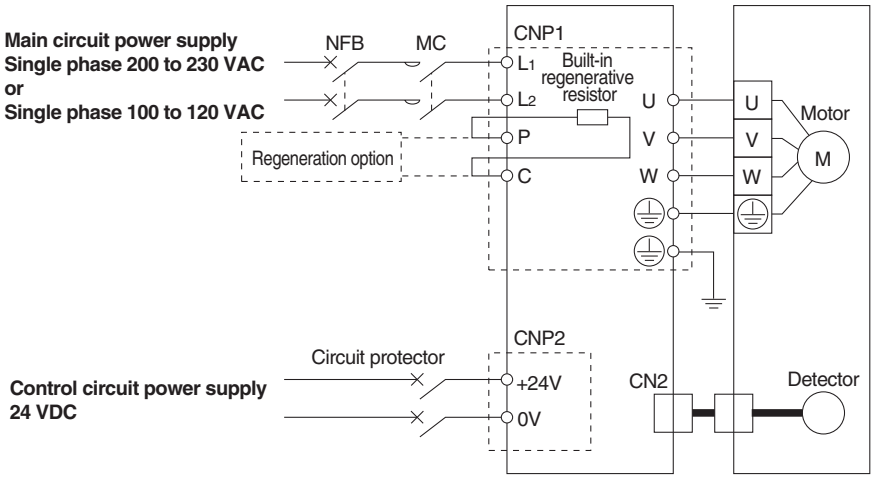

Main Circuit Power Supply Connector: CNP1

∗ Accessory

Terminal name	Function	Details
⏚	Protective earth (PE)	Should be grounded by connecting the servo motor's earth terminal and the control panel's protective earth (PE).
L_1	Main circuit power supply	Connect the main circuit power supply. LECSA1: Single phase 100 to 120 VAC, 50/60 Hz LECSA2: Single phase 200 to 230 VAC, 50/60 Hz
L_2		
P	Regeneration option	Terminal to connect regeneration option LECSA□-S1: No need for connection LECSA□-S3, S4: Connected at time of shipping. ∗ If regeneration option is required for "Model Selection", connect to this terminal.
C		
U	Servo motor power (U)	Connect to motor cable (U, V, W)
V	Servo motor power (V)	
W	Servo motor power (W)	

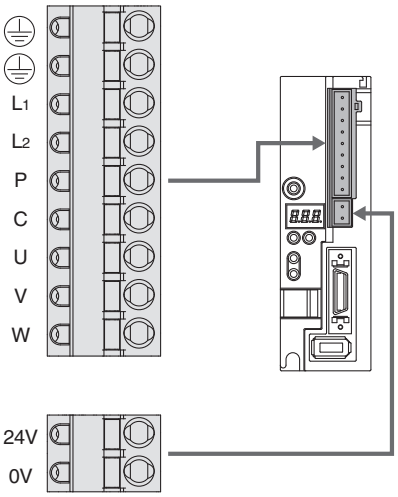

Control Circuit Power Supply Connector: CNP2

∗ Accessory

Terminal name	Function	Details
24V	Control circuit power supply (24 V)	24 V side of the control circuit power supply (24 VDC) which supplies the driver.
0V	Control circuit power supply (0 V)	0 V side of the control circuit power supply (24 VDC) which supplies the driver.

Power Supply Wiring Example: LECSB, LECSC, LECSS

LECSB1-□
LECSC1-□
LECSS1-□

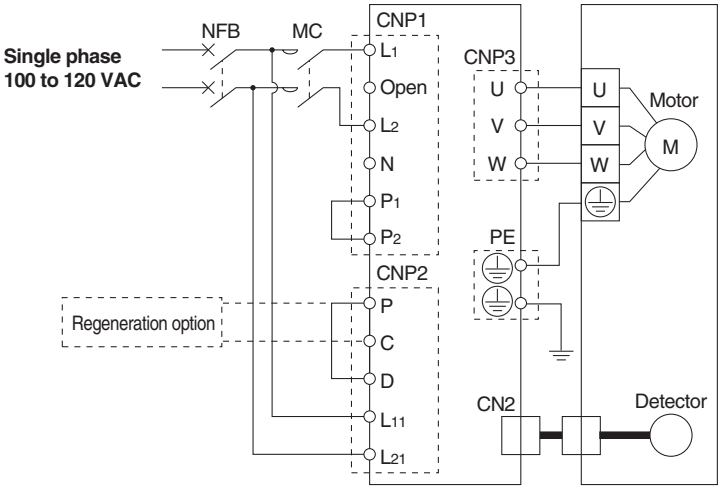

LECSB2-□
LECSC2-□
LECSS2-□

For single phase 200 VAC

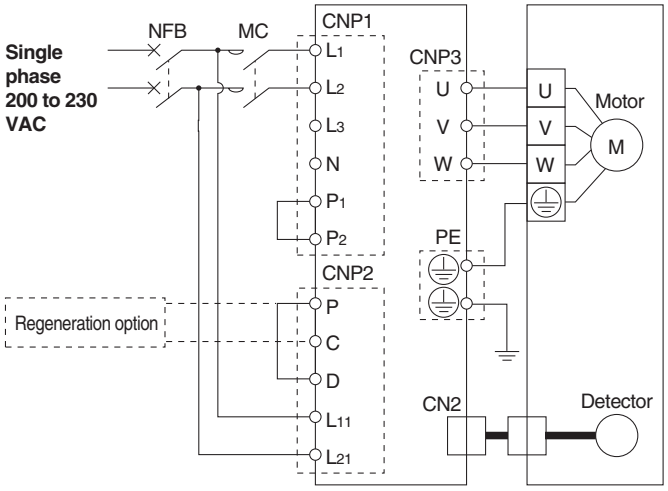

For three phase 200 VAC

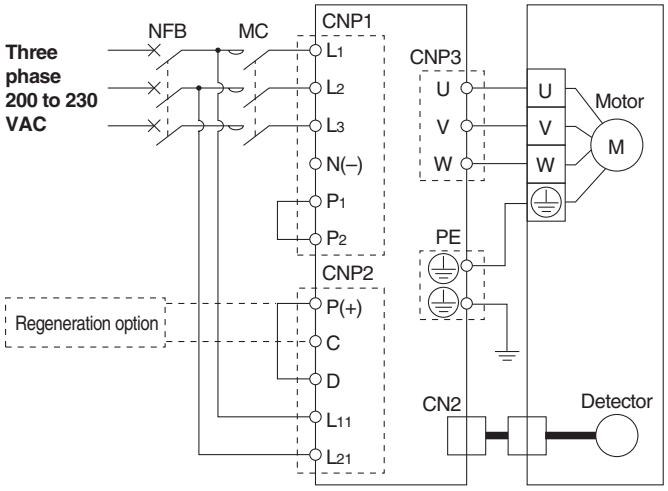

Note) For single phase 200 to 230 VAC, power supply should be connected to L_1 and L_2 terminals, with nothing connected to L_3.

Main Circuit Power Supply Connector: CNP1

∗ Accessory

Terminal name	Function	Details
L_1	Main circuit power supply	Connect the main circuit power supply. LECSB1/LECSC1/LECSS1: Single phase 100 to 120 VAC, 50/60 Hz Connection terminal: L_1,L_2 LECSB2/LECSC2/LECSS2: Single phase 200 to 230 VAC, 50/60 Hz Connection terminal: L_1,L_2 Three phase 200 to 230 VAC, 50/60 Hz Connection terminal: L_1,L_2,L_3
L_2		
L_3		
N	Do not connect.	
P_1	Connect between P_1 and P_2. (Connected at time of shipping.)	
P_2		

Control Circuit Power Supply Connector: CNP2

∗ Accessory

Terminal name	Function	Details
P	Regeneration option	Connect between P and D. (Connected at time of shipping.) ∗ If regeneration option is required for "Model Selection", connect to this terminal.
C		
D		
L_{11}	Control circuit power supply	Connect the control circuit power supply. LECSB1/LECSC1/LECSS1: Single phase 100 to 120 VAC, 50/60 Hz Connection terminal: L_{11},L_{21} LECSB2/LECSC2/LECSS2: Single phase 200 to 230 VAC, 50/60 Hz Connection terminal: L_{11},L_{21} Three phase 200 to 230 VAC, 50/60 Hz Connection terminal: L_{11},L_{21}
L_{21}		

Motor Connector: CNP3

∗ Accessory

Terminal name	Function	Details
U	Servo motor power (U)	Connect to motor cable (U, V, W)
V	Servo motor power (V)	
W	Servo motor power (W)	

LECSB Front view example

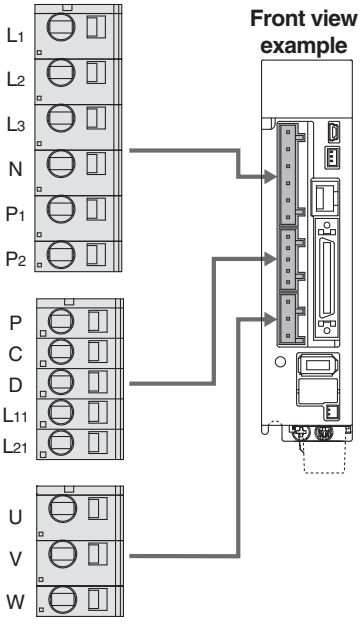

Control Signal Wiring Example: LECSA

This wiring example shows connection with a PLC (FX3U-□□MT/ES) manufactured by Mitsubishi Electric as when used in position control mode. Refer to the LECSA operation manual and any technical literature or operation manuals for your PLC and positioning unit before connecting to another PLC or positioning unit.

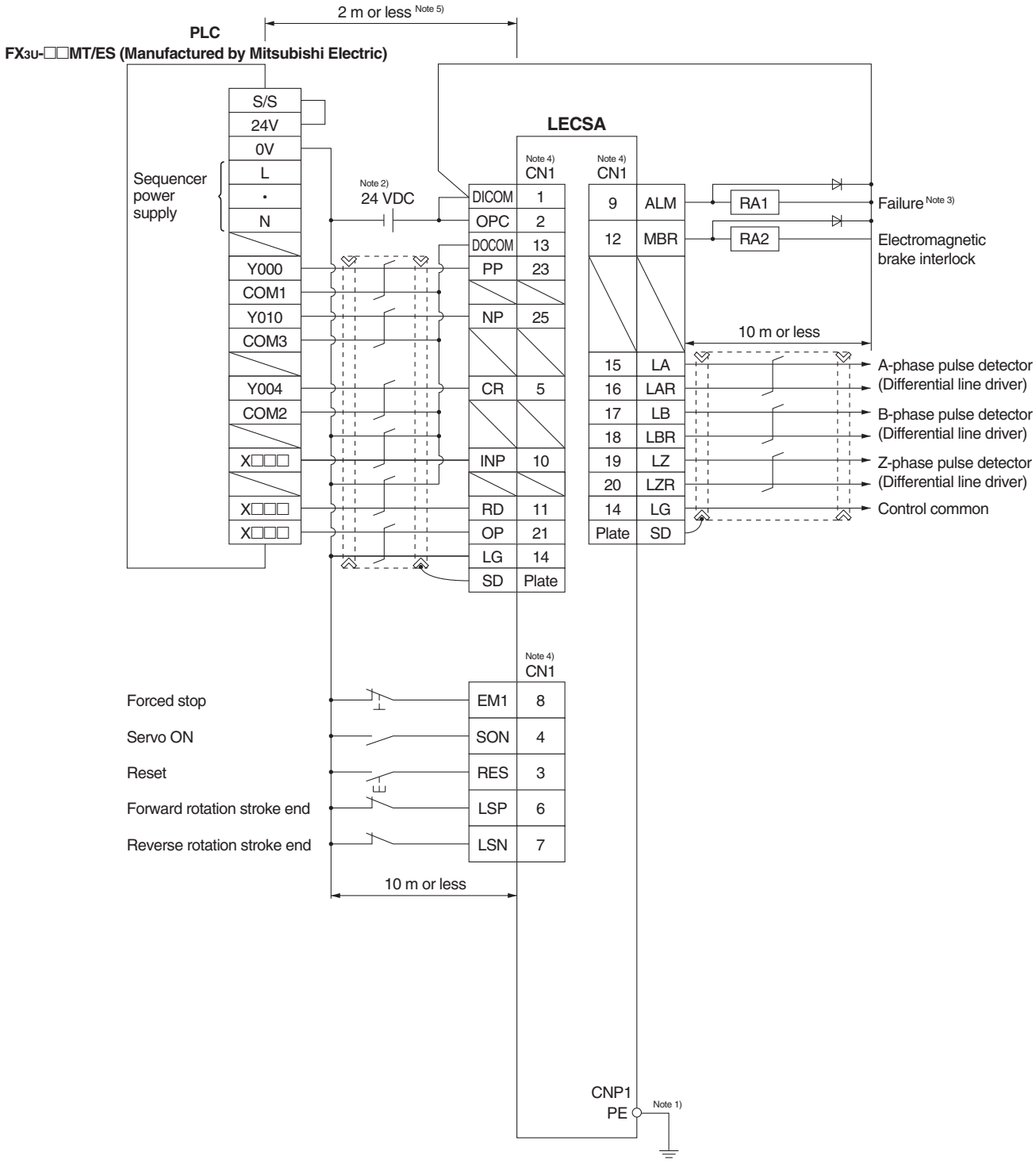

Note 1) For preventing electric shock, be sure to connect the driver circuit power supply connector (CNP1)'s protective earth (PE) terminal to the control panel's protective earth (PE).

Note 2) For interface use, supply 24 VDC ±10% 200 mA using an external source. 200 mA is the value when all I/O command signals are used and reducing the number of inputs/outputs can decrease current capacity. Refer to "Operation Manual" for required current for interface.

Note 3) The failure (ALM) is ON during normal conditions. When it is OFF (alarm occurs), stop the sequencer signal using the sequence program.

Note 4) The same name signals are connected inside the driver.

Note 5) For command pulse input with an open collector method. When a positioning unit loaded with a differential line driver method is used, it is 10 m or less.

Control Signal Wiring Example: LECSB

This wiring example shows connection with a positioning unit (QD75D) manufactured by Mitsubishi Electric as when used in position control mode. Refer to the LECSB operation manual and any technical literature or operation manuals for your PLC and positioning unit before connecting to another PLC or positioning unit.

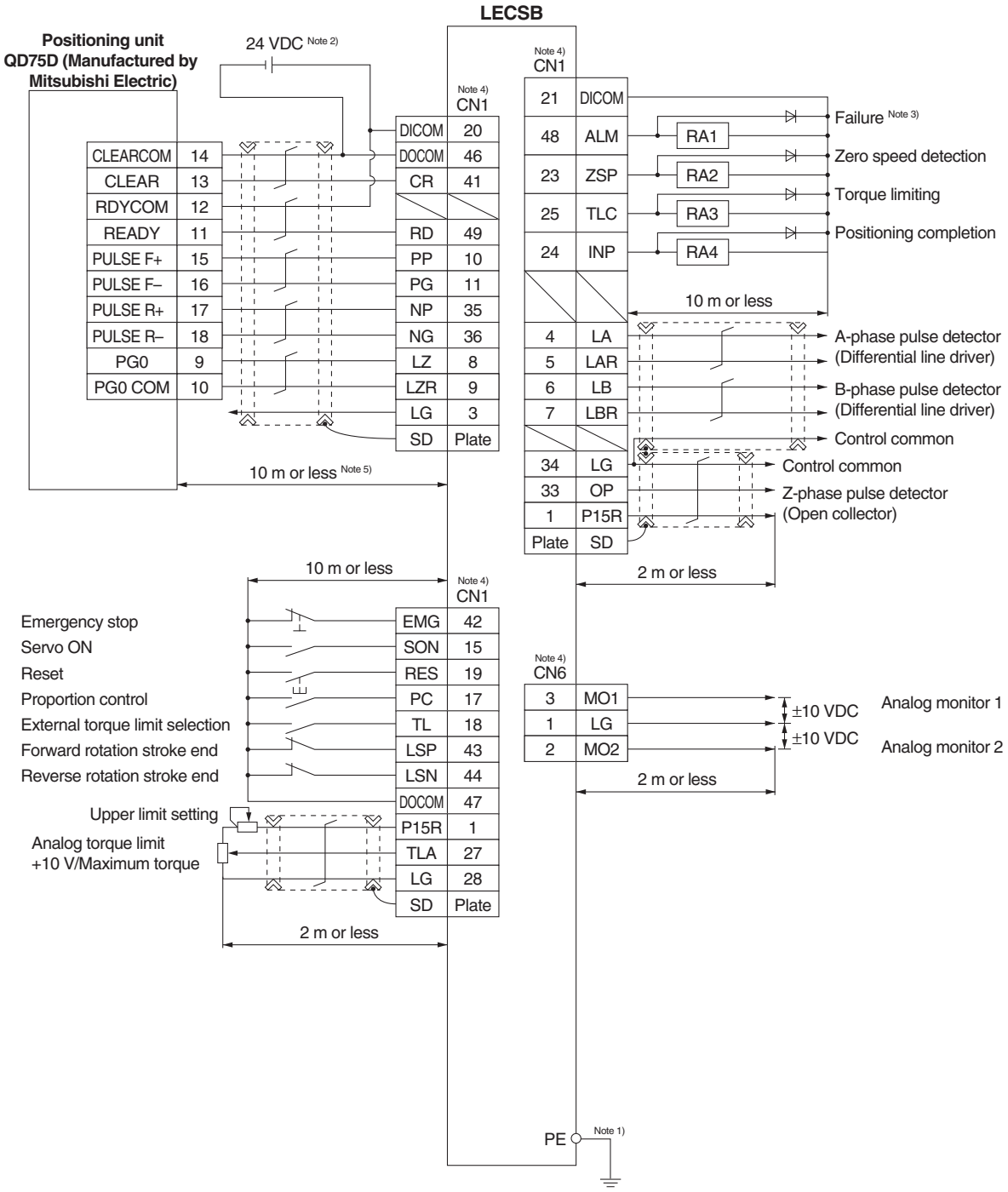

Note 1) For preventing electric shock, be sure to connect the driver's protective earth (PE) terminal to the control panel's protective earth (PE).
Note 2) For interface use, supply 24 VDC ±10% 300 mA using an external source.
Note 3) The failure (ALM) is ON during normal conditions. When it is OFF (alarm occurs), stop the sequencer signal using the sequence program.
Note 4) The same name signals are connected inside the driver.
Note 5) For command pulse input with a differential line driver method. For open collector method, it is 2 m or less.

Control Signal Wiring Example: LECSC

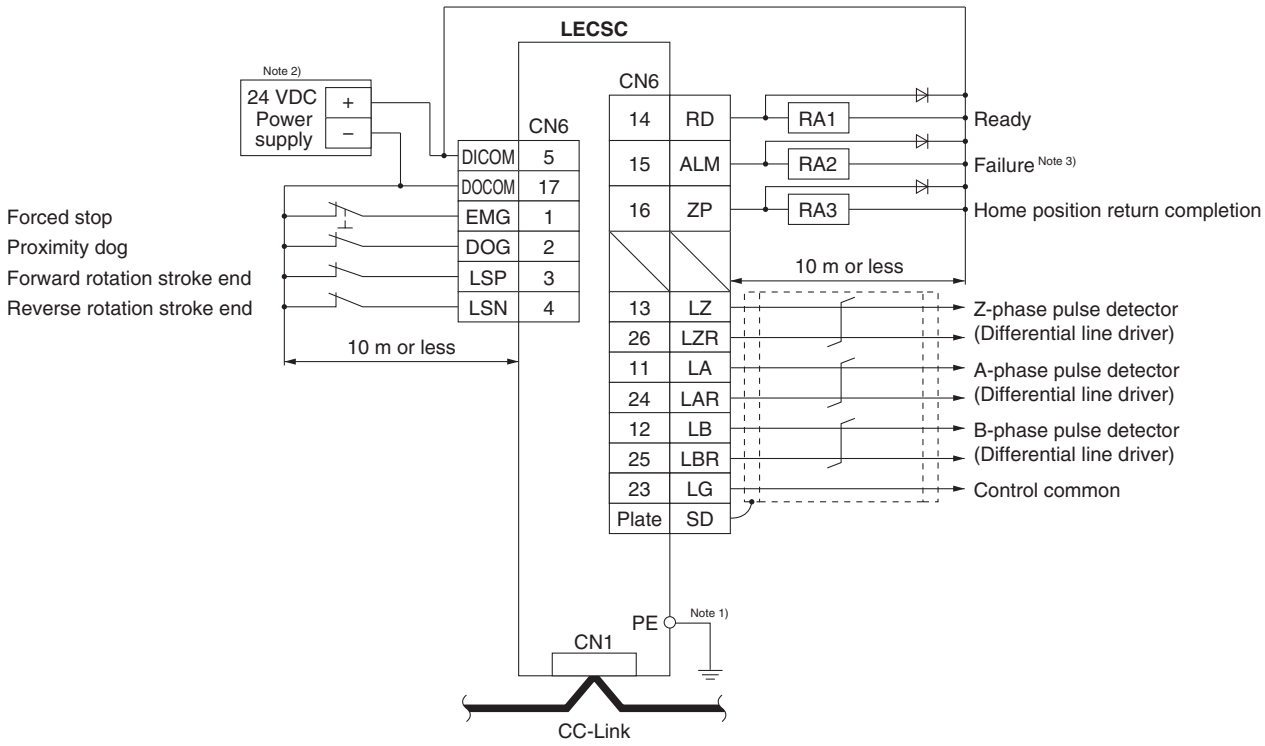

Note 1) For preventing electric shock, be sure to connect the driver's protective earth (PE) terminal (marked) to the control panel's protective earth (PE).
Note 2) For interface use, supply 24 VDC ±10% 150 mA using an external source.
Note 3) The failure (ALM) is ON during normal conditions. When it is OFF (alarm occurs), stop the sequencer signal using the sequence program.

Control Signal Wiring Example: LECSS

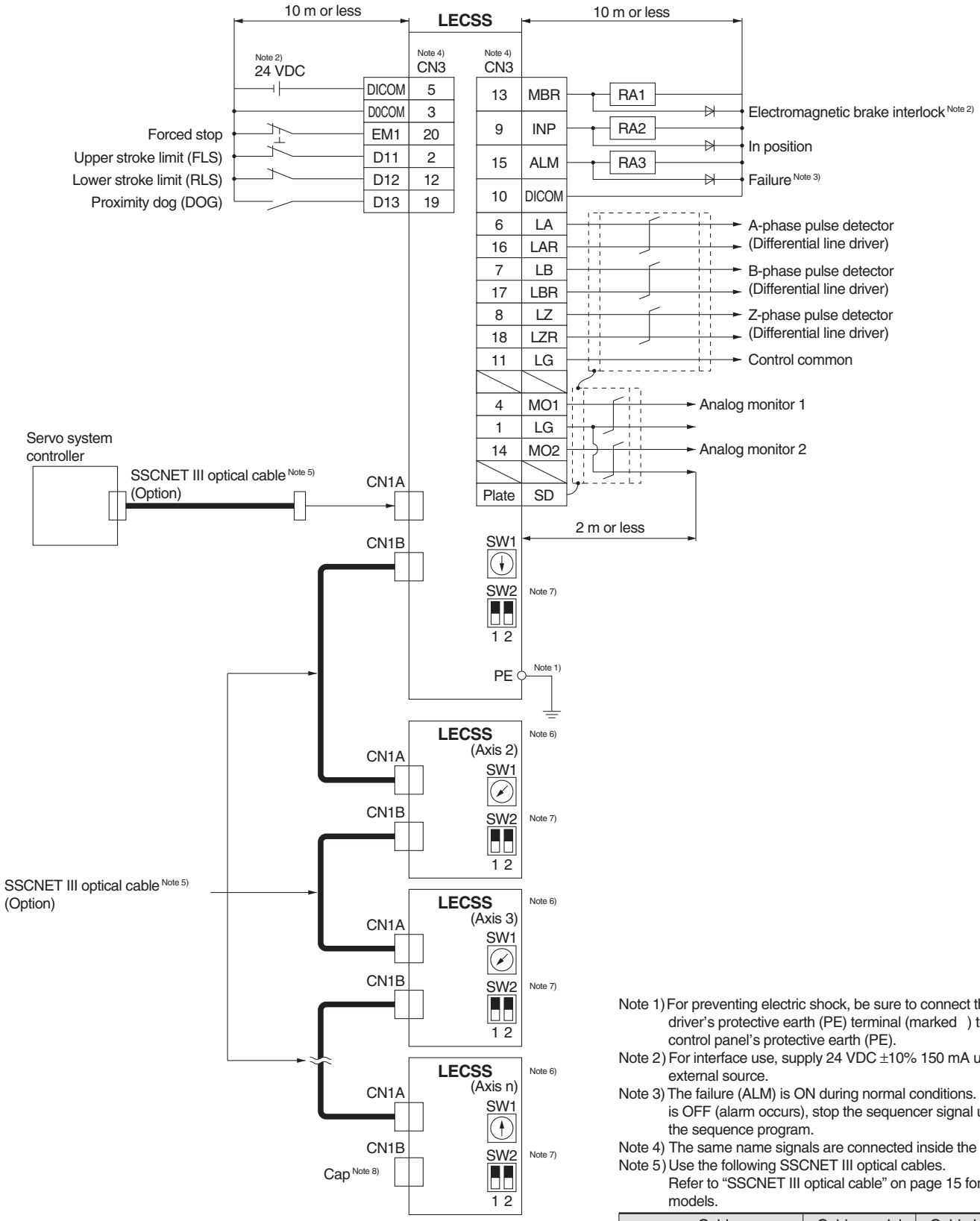

Note 1) For preventing electric shock, be sure to connect the driver's protective earth (PE) terminal (marked) to the control panel's protective earth (PE).

Note 2) For interface use, supply 24 VDC ±10% 150 mA using an external source.

Note 3) The failure (ALM) is ON during normal conditions. When it is OFF (alarm occurs), stop the sequencer signal using the sequence program.

Note 4) The same name signals are connected inside the driver.

Note 5) Use the following SSCNET III optical cables.
Refer to "SSCNET III optical cable" on page 15 for cable models.

Cable	Cable model	Cable length
SSCNET III optical cable	**LE-CSS-□**	0.15 m to 3 m

Note 6) Connections from Axis 2 onward are omitted.

Note 7) Up to 16 axes can be set.

Note 8) Be sure to place a cap on unused CN1A/CN1B.

Options

Motor cable, Lock cable, Encoder cable (LECS□ common)

LE − CS M − S 5 A

Motor type

S	AC servo motor

Direction of connector

A	Axis side
B	Counter axis side

Cable description

M	Motor cable
B	Lock cable
E	Encoder cable

Cable length (L) [m]

2	2
5	5
A	10

Cable type

S	Standard cable
R	Robotic cable

∗ LE-CSM-S□□ is MR-PWS1CBL□M-A□-L manufactured by Mitsubishi Electric.
LE-CSB-S□□ is MR-BKS1CBL□M-A□-L manufactured by Mitsubishi Electric.
LE-CSE-S□□ is MR-J3ENCBL□M-A□-L manufactured by Mitsubishi Electric.
LE-CSM-R□□ is MR-PWS1CBL□M-A□-H manufactured by Mitsubishi Electric.
LE-CSB-R□□ is MR-BKS1CBL□M-A□-H manufactured by Mitsubishi Electric.
LE-CSE-R□□ is MR-J3ENCBL□M-A□-H manufactured by Mitsubishi Electric.

LE-CSM-□□: Motor cable

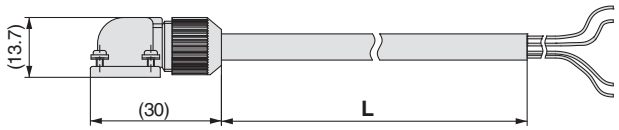

LE-CSB-□□: Lock cable

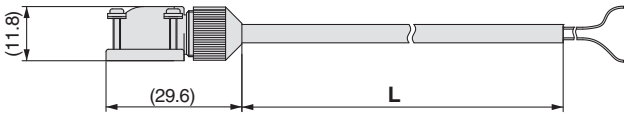

LE-CSE-□□: Encoder cable

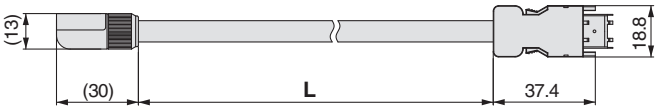

I/O connector

LE − CSN A

Controller type

A	LECSA□, LECSC□
B	LECSB□
S	LECSS□

∗ LE-CSNA: 10126-3000EL (connector)/10326-3210-0000 (shell kit) manufactured by 3M or equivalent item.
LE-CSNB: 10150-3000PE (connector)/10350-52F0-008 (shell kit) manufactured by 3M or equivalent item.
LE-CSNS: 10120-3000PE (connector)/10320-52F0-008 (shell kit) manufactured by 3M or equivalent item.

LE-CSNA

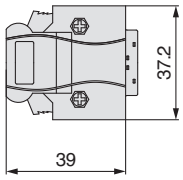

LE-CSNB

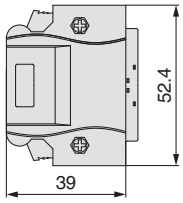

LE-CSNS

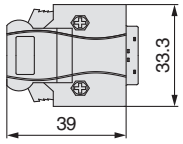

Regeneration option (LECS□ common)

LEC − MR − RB − □

Regeneration option type

032	Allowable regenerative power 30 W
12	Allowable regenerative power 100 W

∗ Confirm regeneration option to be used in "Model Selection".

Dimensions [mm]

Model	LA	LB	LC	LD
LEC-MR-RB-032	30	119	99	1.6
LEC-MR-RB-12	40	169	149	2

∗ MR-RB-□ manufactured by Mitsubishi Electric.

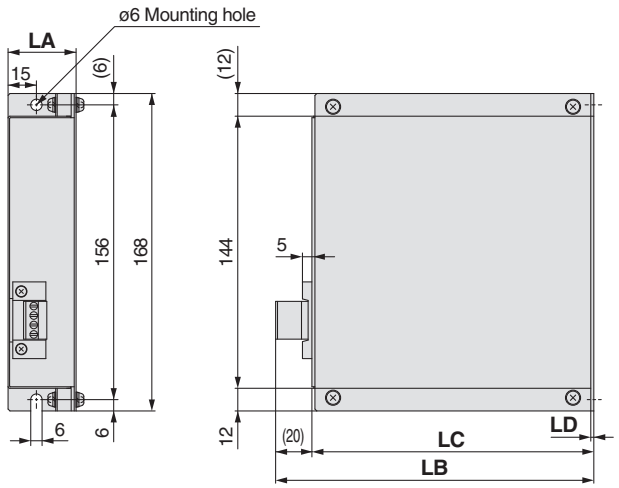

SSCNET III optical cable

LE − CSS − 1

Motor type

S	AC servo motor

Cable description

S	SSCNET III optical cable

Cable length

L	0.15 m
K	0.3 m
J	0.5 m
1	1 m
3	3 m

∗ LE-CSS-□ is MR-J3BUS□M manufactured by Mitsubishi Electric.

Options

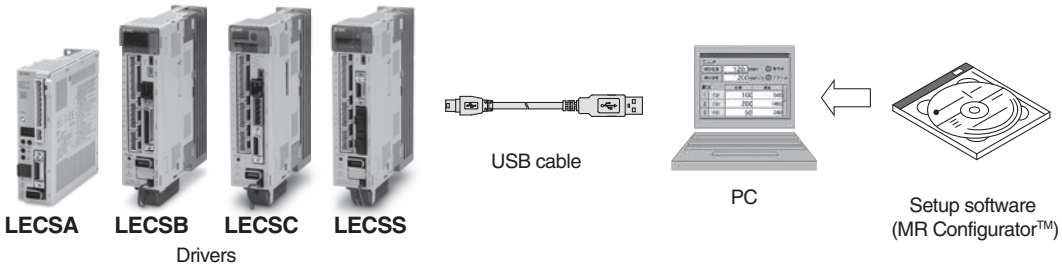

Setup software (MR Configurator™) (LECSA, LECSB, LECSC, LECSS common)

LEC − MR − SETUP221 □

Display language

Nil	Japanese version
E	English version

∗ MRZJW3-SETUP221 manufactured by Mitsubishi Electric.
Refer to Mitsubishi Electric's website for operating environment and version update information.
MR Configurator™ is a registered trademark or trademark of Mitsubishi Electric.

Adjustment, motor display, diagnostics, parameter read/write, and test operation can be performed upon a PC.

Compatible PC

When using setup software (MR Configurator™), use an IBM PC/AT compatible PC that meets the following operating conditions.

Hardware Requirements

Equipment		Setup software (MR Configurator™) **LEC-MR-SETUP221**□
Note 1) Note 2) Note 3) PC	OS	Windows®98, Windows®Me, Windows®2000 Professional, Windows®XP Professional / Home Edition, Windows Vista® Home Basic / Home Premium / Business / Ultimate / Enterprise Windows®7 Starter / Home Premium / Professional / Ultimate / Enterprise
	Available HD space	130 MB or more
	Communication interface	Use USB port
Display		Resolution 1024 x 768 or more Must be capable of high color (16-bit) display. The connectable with the above PC
Keyboard		The connectable with the above PC
Mouse		The connectable with the above PC
Printer		The connectable with the above PC
USB cable		LEC-MR-J3USB Note 4, 5)

Note 1) Before using a PC for setting LECSA point table method/program method or LECSC point table No. input, upgrade to version C5 (Japanese version) /version C4 (English version). Refer to Mitsubishi Electric's website for version upgrade information.
Note 2) Windows, Windows Vista, Windows 7 are registered trademarks of Microsoft Corporation in the United States and/or other countries.
Note 3) This software may not run correctly depending on the PC that you are using.
Note 4) Not compatible with 64-bit Windows® XP and 64-bit Windows Vista®.
Note 5) Order USB cable separately.

USB cable (3 m)

LEC − MR − J3USB

∗ MR-J3USB manufactured by Mitsubishi Electric.

Cable for connecting PC and driver when using the setup software (MR Configurator™).
Do not use any cable other than this cable.

Battery (only for LECSB, LECSC or LECSS)

LEC − MR − J3BAT

∗ MR-J3BAT manufactured by Mitsubishi Electric.

Battery for replacement.
Absolute position data is maintained by installing the battery to the driver.

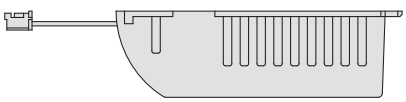

Controller

Step Data Input Type ····· **Page 15**

Step Motor
(Servo/24 VDC)

Series LECP6

Programless Type ····· **Page 25**

Step Motor
(Servo/24 VDC)

Series LECP1

Controller (Step Data Input Type)
Step Motor (Servo/24 VDC)
Series LECP6

How to Order

LE C P 6 N □ □ – □

Controller

Compatible motor

P	Step motor (Servo/24 VDC)

Number of step data (Points)

6	64

Parallel I/O type

N	NPN
P	PNP

I/O cable length [m]

Nil	Without cable
1	1.5
3	3
5	5

Option

Nil	Screw mounting
D Note)	DIN rail mounting

Note) DIN rail is not included. Order it separately.

Actuator part number

(Except cable specifications and actuator options)
Example: Enter [LER10K-2] for LER10K-2L-R16N1

∗ When controller equipped type (-□6N□/-□6P□) is selected when ordering the LE series, you do not need to order this controller.

The controller is sold as single unit after the compatible actuator is set.

Confirm that the combination of the controller and the actuator is correct.

<Check the following before use.>

① Check that actuator label for model number. This matches the controller.

② Check Parallel I/O configuration matches (NPN or PNP).

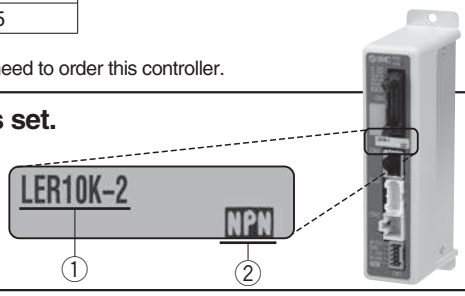

∗ Refer to the operation manual for using the products. Please download it via our website. http://www.smcworld.com

Specifications

Basic Specifications

Item	Specifications
Compatible motor	Step motor (Servo/24 VDC)
Power supply Note 1)	Power voltage: 24 VDC 10% Current consumption: 3 A (Peak 5 A) Note 2) [Including motor drive power, control power, stop, lock release]
Parallel input	11 inputs (Photo-coupler isolation)
Parallel output	13 outputs (Photo-coupler isolation)
Compatible encoder	Incremental A/B phase (800 pulse/rotation)
Serial communication	RS485 (Modbus protocol compliant)
Memory	EEPROM
LED indicator	LED (Green/Red) one of each
Lock control	Forced-lock release terminal Note 3)
Cable length [m]	I/O cable: 5 or less Actuator cable: 20 or less
Cooling system	Natural air cooling
Operating temperature range	32 to 104°F (0 to 40°C (No freezing))
Operating humidity range [%RH]	90 or less (No condensation)
Storage temperature range	14 to 140°F (–10 to 60°C) (No freezing))
Storage humidity range [%RH]	90 or less (No condensation)
Insulation resistance [MΩ]	Between the housing (radiation fin) and SG terminal 50 (500 VDC)
Weight lb [g]	0.3 (150) (Screw mounting) 0.4 (170) (DIN rail mounting)

Note 1) Do not use the power supply of "inrush current prevention type" for the controller power supply.
Note 2) The power consumption changes depending on the actuator model. Refer to the specifications of actuator for more details.
Note 3) Applicable to non-magnetizing lock.

How to Mount

a) Screw mounting (LECP6□□-□)
(Installation with two M4 screws)

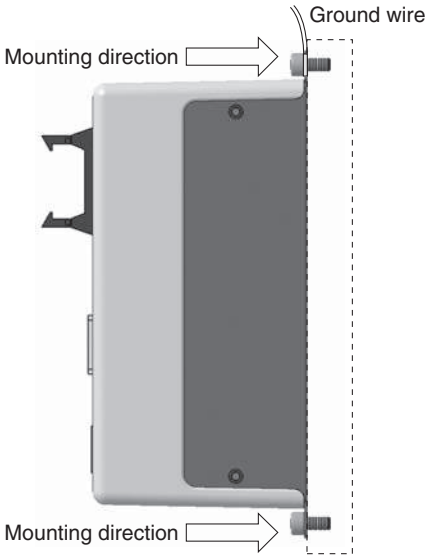

b) DIN rail mounting (LECP6□□D-□)
(Installation with the DIN rail)

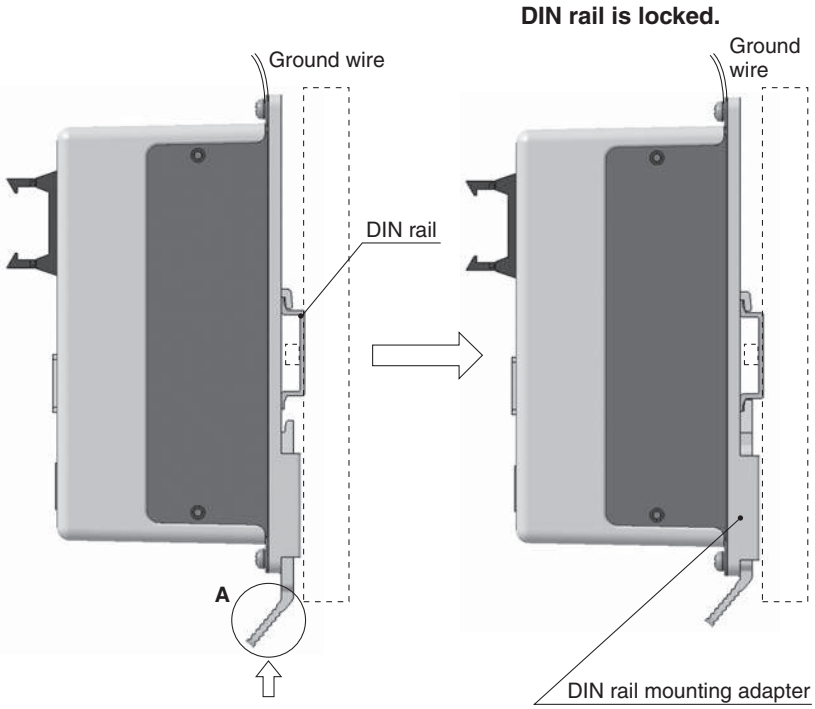

Hook the controller on the DIN rail and press the lever of section **A** in the arrow direction to lock it.

DIN rail
AXT100-DR-□

∗ For □, enter a number from the "No." line in the table below.
* Refer to the dimensions on page 17 for the mounting dimensions.

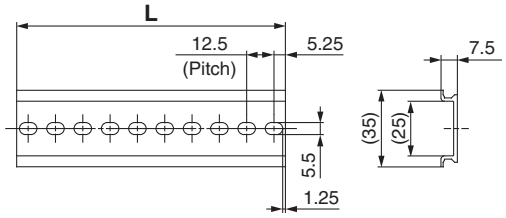

L Dimension [mm]

No.	1	2	3	4	5	6	7	8	9	10	11	12	13	14	15	16	17	18	19	20
L	23	35.5	48	60.5	73	85.5	98	110.5	123	135.5	148	160.5	173	185.5	198	210.5	223	235.5	248	260.5

No.	21	22	23	24	25	26	27	28	29	30	31	32	33	34	35	36	37	38	39	40
L	273	285.5	298	310.5	323	335.5	348	360.5	373	385.5	398	410.5	423	435.5	448	460.5	473	485.5	498	510.5

DIN rail mounting adapter
LEC-D0 (with 2 mounting screws)

This should be used when the DIN rail mounting adapter is mounted onto the screw mounting type controller afterwards.

Dimensions

a) Screw mounting (LECP6□□-□)

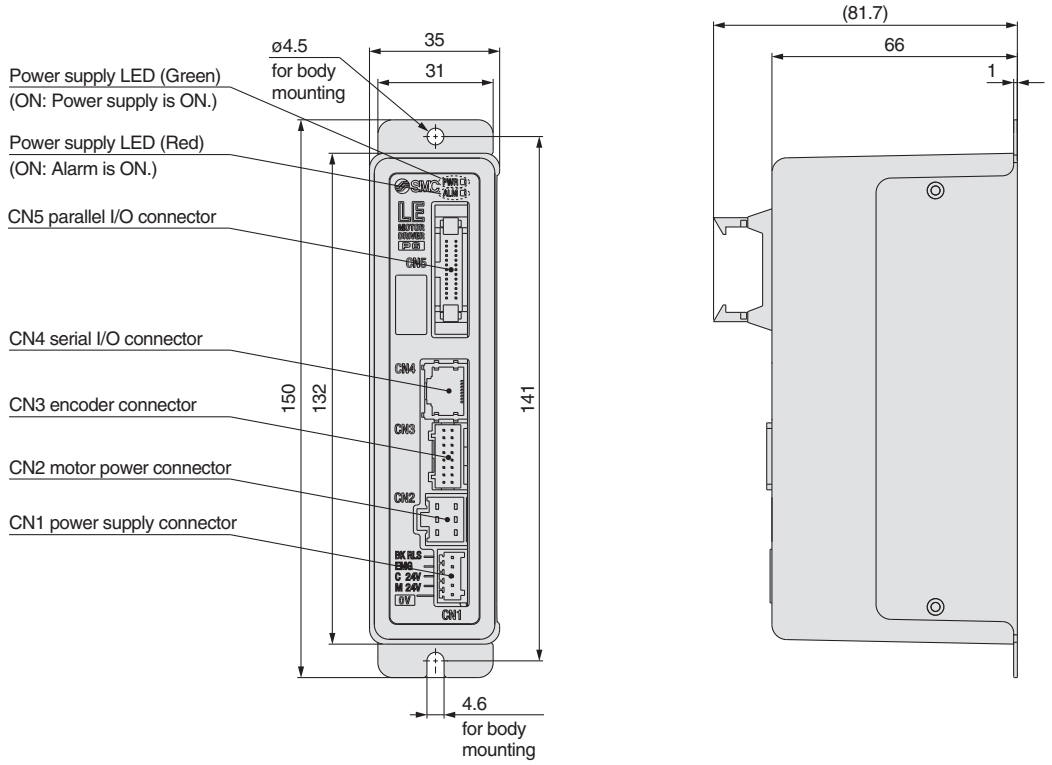

b) DIN rail mounting (LECP6□□D-□)

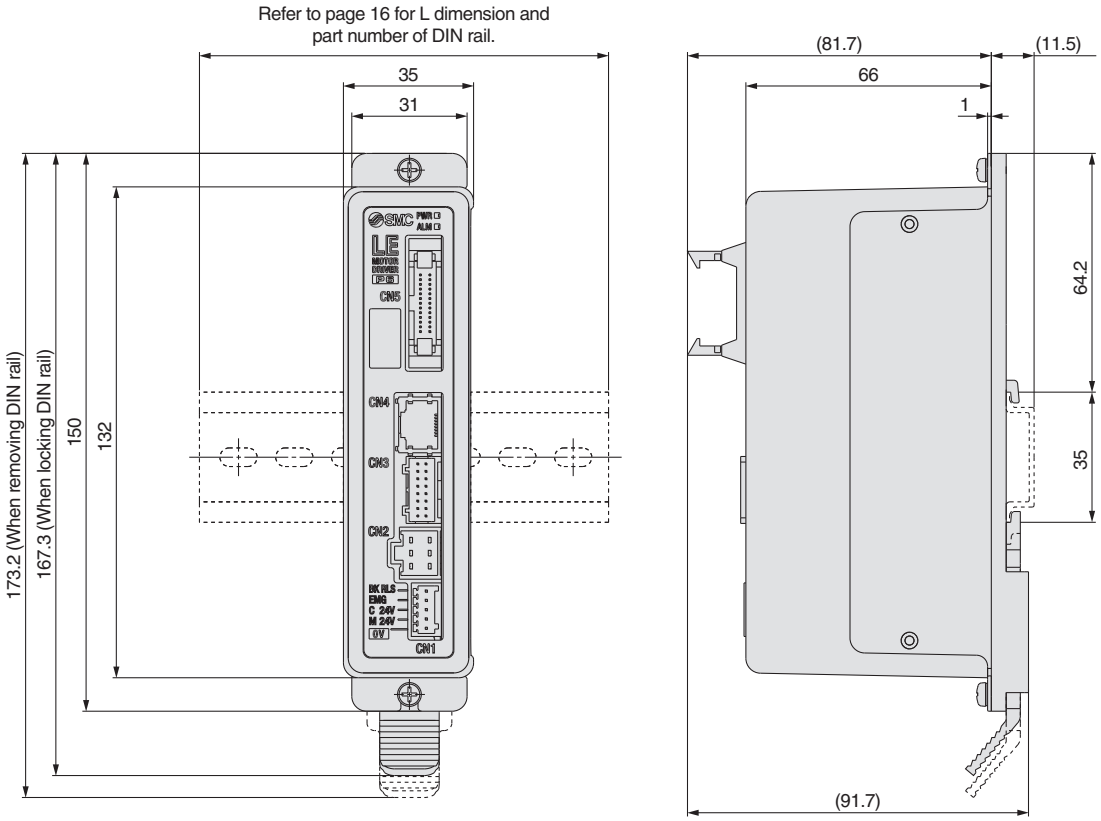

Wiring Example 1

Power Supply Connector: CN1

∗ Power supply plug is an accessory.

CN1 Power Supply Connector Terminal for LECP6 (PHOENIX CONTACT FK-MC0.5/5-ST-2.5)

Terminal name	Function	Function details
0V	Common supply (–)	M24V terminal/C24V terminal/EMG terminal/BK RLS terminal are common (–).
M24V	Motor power supply (+)	This is the motor power supply (+) that is supplied to the controller.
C24V	Control power supply (+)	This is the control power supply (+) that is supplied to the controller.
EMG	Stop (+)	This is the input (+) that releases the stop.
BK RLS	Lock release (+)	This is the input (+) that releases the lock.

Power supply plug for LECP6

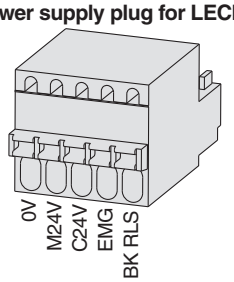

Wiring Example 2

Parallel I/O Connector: CN5

∗ When you connect a PLC, etc., to the CN5 parallel I/O connector, please use the I/O cable (LEC-CN5-□).
∗ The wiring should be changed depending on the type of the parallel I/O (NPN or PNP). Please wire referring to the following diagram.

Wiring diagram

LECP6N□□-□ (NPN)

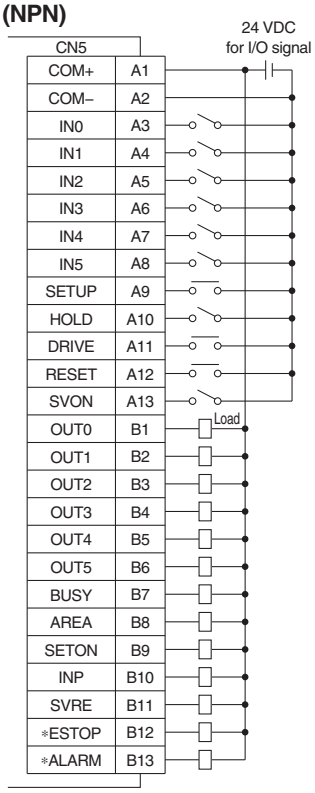

LECP6P□□-□ (PNP)

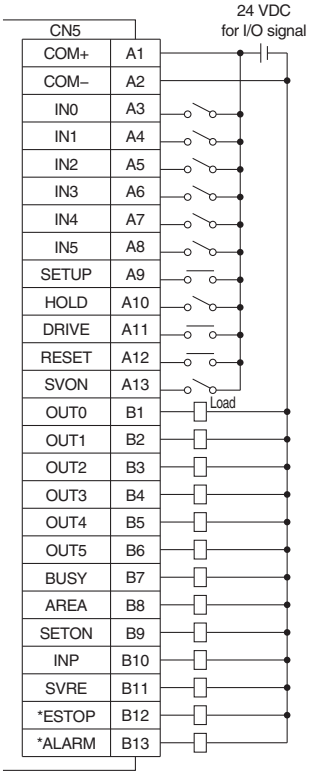

Input Signal

Name	Contents
COM +	Connects the power supply 24 V for input/output signal
COM –	Connects the power supply 0 V for input/output signal
IN0 to IN5	Step data specified Bit No. (Input is instructed in the combination of IN0 to 5.)
SETUP	Instruction to return to the original position
HOLD	Operation is temporarily stopped
DRIVE	Instruction to drive
RESET	Alarm reset and operation interruption
SVON	Servo ON instruction

Output Signal

Name	Contents
OUT0 to OUT5	Outputs the step data No. during operation
BUSY	Outputs when the actuator is moving
AREA	Outputs within the step data area output setting range
SETON	Outputs when returning to the original position
INP	Outputs when target position or target force is reached (Turns on when the positioning or pushing is completed.)
SVRE	Outputs when servo is on
∗ESTOP Note)	Not output when EMG stop is instructed
∗ALARM Note)	Not output when alarm is generated

Note) These signals are output when the power supply of the controller is ON. (N.C.)

Step Data Setting

1. Step data setting for positioning

In this setting, the actuator moves toward and stops at the target position. The following diagram shows the setting items and operation. The setting items and set values for this operation are stated below.

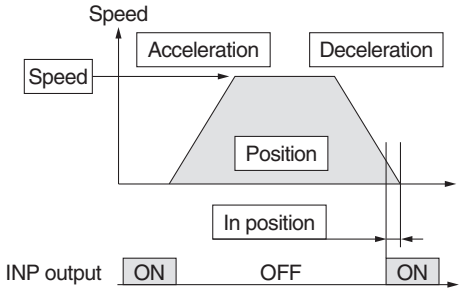

◎: Need to be set.
○: Need to be adjusted as required.
—: Setting is not required.

Step Data (Positioning)

Necessity	Item	Description
◎	Movement MOD	When the absolute position is required, set Absolute. When the relative position is required, set Relative.
◎	Speed	Transfer speed to the target position
◎	Position	Target position
◎	Acceleration	Parameter which defines how rapidly the actuator reaches the speed set. The higher the set value, the faster it reaches the speed set.
◎	Deceleration	Parameter which defines how rapidly the actuator comes to stop. The higher the set value, the quicker it stops.
◎	Pushing force	Set 0. (If values 1 to 100 are set, the operation will be changed to the pushing operation.)
—	Trigger LV	Setting is not required.
—	Pushing speed	Setting is not required.
○	Positioning force	Max. torque during the positioning operation (No specific change is required.)
○	Area 1, Area 2	Condition that turns on the AREA output signal.
○	In position	Condition that turns on the INP output signal. When the actuator enters the range of [in position], the INP output signal turns on. (It is unnecessary to change this from the initial value.) When it is necessary to output the arrival signal before the operation is completed, make the value larger.

2. Step data setting for pushing

The actuator moves toward the pushing start position, and when it reaches that position, it starts pushing with less than the set force. The following diagram shows the setting items and operation. The setting items and set values for this operation are stated below.

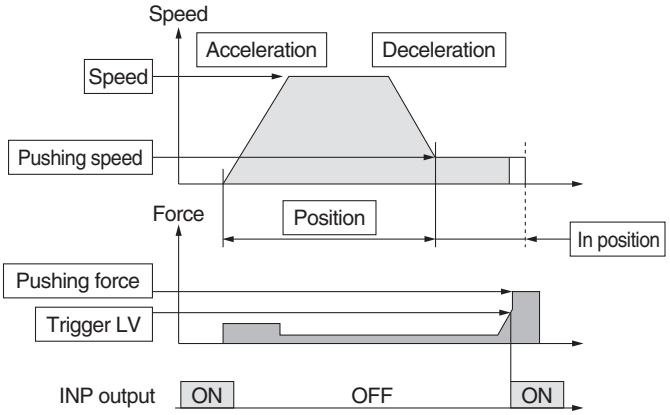

◎: Need to be set.
○: Need to be adjusted as required.

Step Data (Pushing)

Necessity	Item	Description
◎	Movement MOD	When the absolute position is required, set Absolute. When the relative position is required, set Relative.
◎	Speed	Transfer speed to the pushing start position
◎	Position	Pushing start position
◎	Acceleration	Parameter which defines how rapidly the actuator reaches the speed set. The higher the set value, the faster it reaches the speed set.
◎	Deceleration	Parameter which defines how rapidly the actuator comes to stop. The higher the set value, the quicker it stops.
◎	Pushing force	Pushing force ratio is defined. The setting range differs depending on the electric actuator type. Refer to the operation manual for the electric actuator.
◎	Trigger LV	Condition that turns on the INP output signal. The INP output signal is turned on when the generated force exceeds the value. Threshold level should be less than the pushing force.
○	Pushing speed	Pushing speed When the speed is set fast, the electric actuator and work pieces might be damaged due to the impact when they hit the end, so this set value should be smaller. Refer to the operation manual of the electric actuator.
○	Positioning force	Max. torque during the positioning operation (No specific change is required.)
○	Area 1, Area 2	Condition that turns on the AREA output signal.
◎	In position	Transfer distance during pushing. If the transferred distance exceeds the setting, it stops even if it is not pushing. If the transfer distance is exceeded, the INP output signal will not be turned on.

Signal Timing

Return to Origin

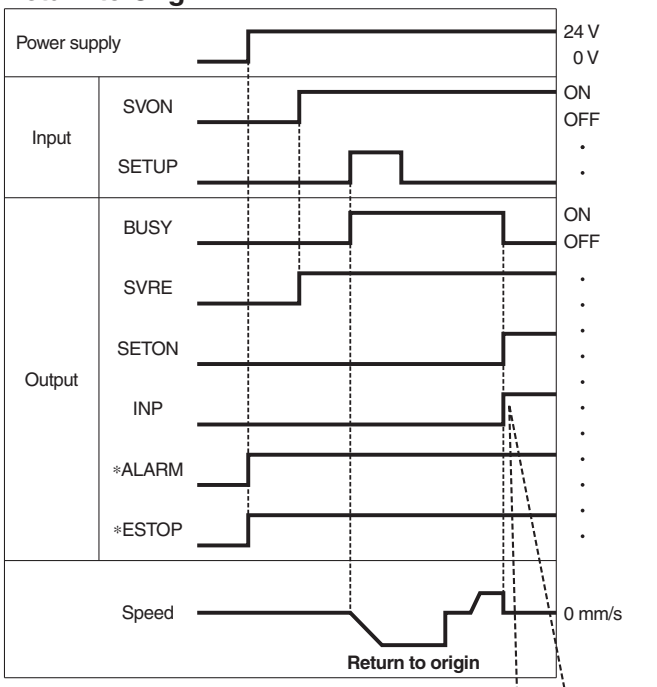

∗ "∗ALARM" and "∗ESTOP" are expressed as negative-logic circuit.

Positioning Operation

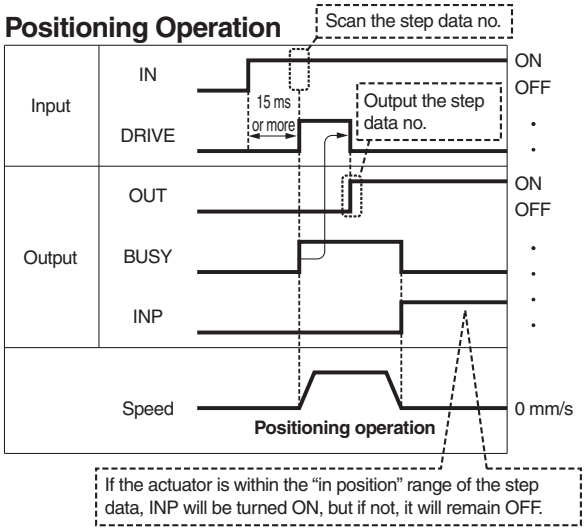

∗ "OUT" is output when "DRIVE" is changed from ON to OFF.
(When power supply is applied, "DRIVE" or "RESET" is turned ON or "∗ESTOP" is turned OFF, all of the "OUT" outputs are turned OFF.)

Pushing Operation

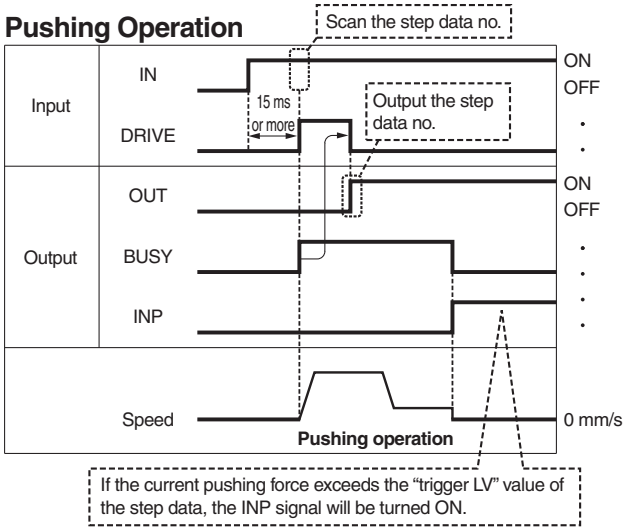

HOLD

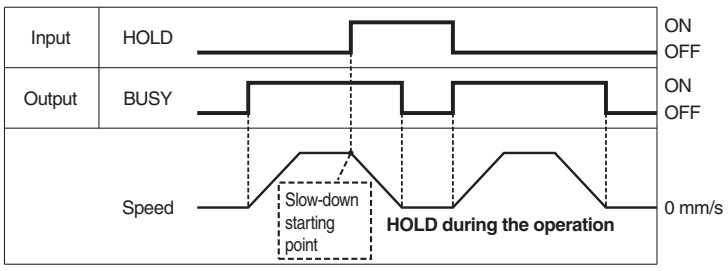

∗ When the actuator is in the positioning range in the pushing operation, it does not stop even if HOLD signal is input.

Reset

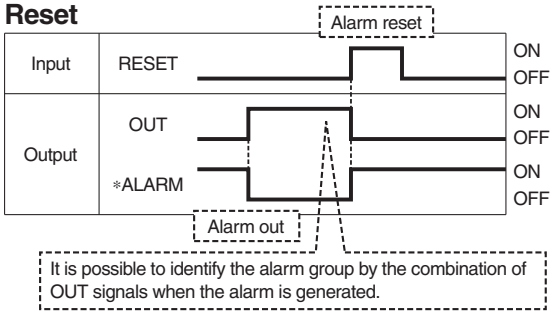

∗ "∗ALARM" is expressed as negative-logic circuit.

Options: Actuator Cable, I/O Cable

Actuator cable

[Robotic cable for step motor (Servo/24 VDC), standard cable]

LE − CP − 1 − ☐

Cable length (L)[m]

1	1.5
3	3
5	5
8	8*
A	10*
B	15*
C	20*

* Produced upon receipt of order (Robotic cable only)

Cable type

Nil	Robotic cable (Flexible cable)
S	Standard cable

LE-CP-$\frac{1}{3}_{5}$/Cable length: 1.5 m, 3 m, 5 m

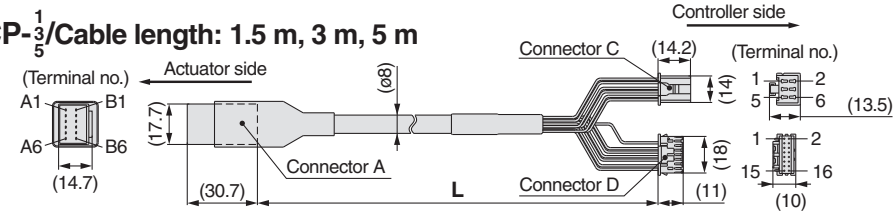

LE-CP-$\frac{8}{A}\frac{B}{C}$/Cable length: 8 m, 10 m, 15 m, 20 m

(* Produced upon receipt of order)

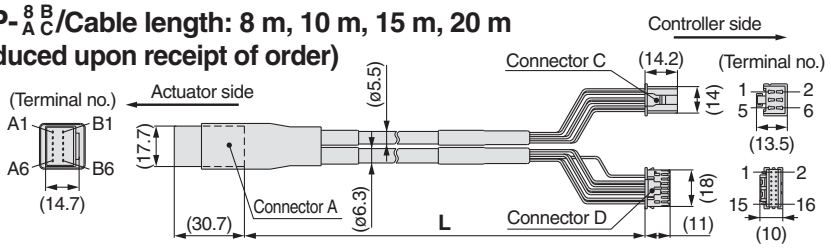

Circuit	Connector A terminal no.	Cable color	Connector C terminal no.
$\overline{A}$	B-1	Brown	2
A	A-1	Red	1
$\overline{B}$	B-2	Orange	6
B	A-2	Yellow	5
COM-A/COM	B-3	Green	3
COM-B/—	A-3	Blue	4

Shield

		Cable color	Connector D terminal no.
Vcc	B-4	Brown	12
GND	A-4	Black	13
$\overline{A}$	B-5	Red	7
A	A-5	Black	6
$\overline{B}$	B-6	Orange	9
B	A-6	Black	8
		—	3

I/O cable

LEC − CN5 − 1

Cable length (L) [m]

1	1.5
3	3
5	5

* Conductor size: AWG28

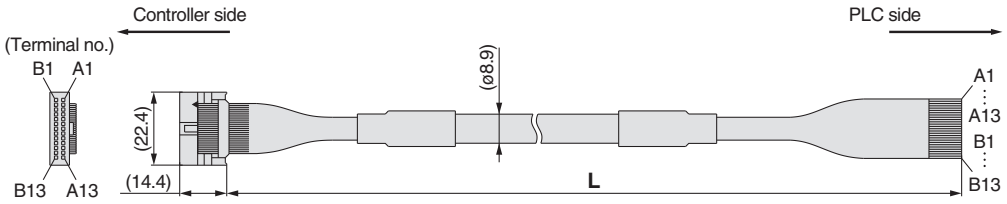

Connector pin No.	Insulation color	Dot mark	Dot color
A1	Light brown	■	Black
A2	Light brown	■	Red
A3	Yellow	■	Black
A4	Yellow	■	Red
A5	Light green	■	Black
A6	Light green	■	Red
A7	Gray	■	Black
A8	Gray	■	Red
A9	White	■	Black
A10	White	■	Red
A11	Light brown	■ ■	Black
A12	Light brown	■ ■	Red
A13	Yellow	■ ■	Black

Connector pin No.	Insulation color	Dot mark	Dot color
B1	Yellow	■ ■	Red
B2	Light green	■ ■	Black
B3	Light green	■ ■	Red
B4	Gray	■ ■	Black
B5	Gray	■ ■	Red
B6	White	■ ■	Black
B7	White	■ ■	Red
B8	Light brown	■ ■ ■	Black
B9	Light brown	■ ■ ■	Red
B10	Yellow	■ ■ ■	Black
B11	Yellow	■ ■ ■	Red
B12	Light green	■ ■ ■	Black
B13	Light green	■ ■ ■	Red
—	Shield		

Controller Setting Kit/LEC-W1

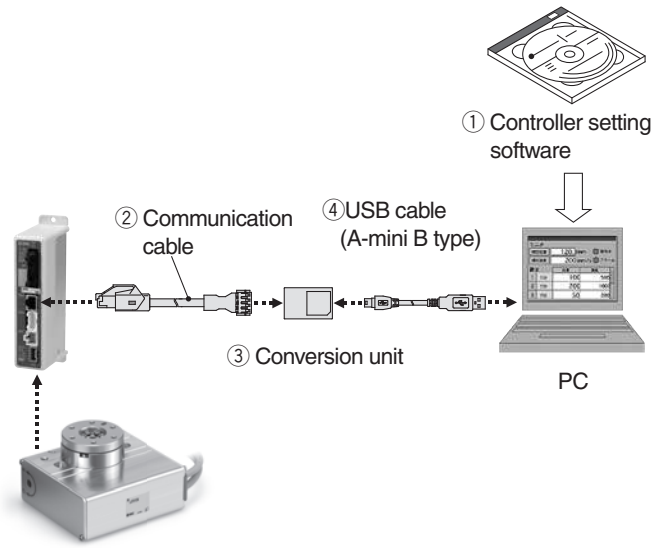

How to Order

LEC – W1

Controller setting kit
(Japanese and English are available.)

Contents

① **Controller setting software (CD-ROM)**
② **Communication cable**
(Cable between the controller and the conversion unit)
③ **Conversion unit**
④ **USB cable**
(Cable between the PC and the conversion unit)

Hardware Requirements

PC/AT compatible machine installed with Windows XP and equipped with USB1.1 or USB2.0 ports.

∗ Windows® and Windows XP® are registered trademarks of Microsoft Corporation.

Screen Example

Easy mode screen example

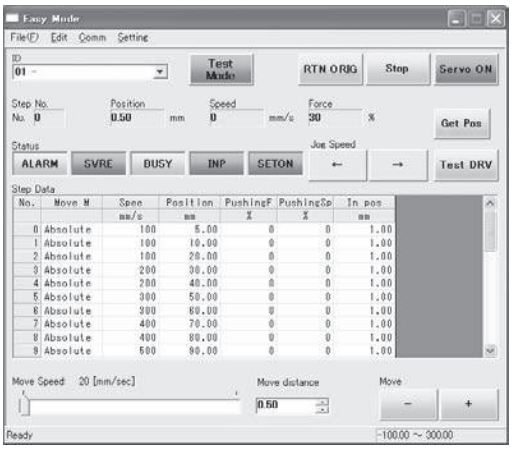

Easy operation and simple setting

- Allowing to set and display actuator step data such as position, speed, force, etc.
- Setting of step data and testing of the drive can be performed on the same page.
- Can be used to jog and move at a constant rate.

Normal mode screen example

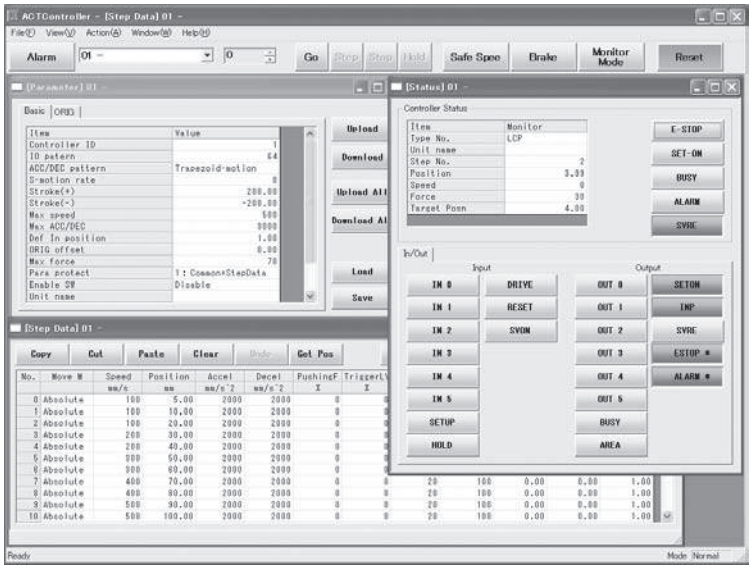

Detail setting

- Step data can be set in detail.
- Signals and terminal status can be monitored.
- Parameters can be set.
- JOG and constant rate movement, return to origin, test operation and testing of compulsory output can be performed.

Series LEC
Teaching Box/LEC-T1

How to Order

LEC – T1 – 3 J G

Teaching box

Cable length [m]

3	3

Initial language

J	Japanese
E	English

Stop switch

G	Equipped with stop switch

Enable switch

Nil	None
S	Equipped with enable switch

∗ Interlock switch for jog test function

Standard functions
- **Chinese character display**
- **Stop switch is provided.**

Option
- **Enable switch is provided.**

Specifications

Item	Description
Switch	Stop switch, Enable switch (Option)
Cable length [m]	3
Enclosure	IP64 (Except connector)
Operating temperature range	41 to 122°F (5 to 50°C)
Operating humidity range [%RH]	90 or less (No condensation)
Weight	0.77 lbs (350g) (Except cable)

Note) CE-compliance
The EMC compliance of the teaching box was tested with the LECP6 series step motor controller (servo/24 VDC) and an applicable actuator.

Easy Mode

Function	Description
Step data	• Setting of step data
Jog	• Jog operation • Return to origin
Test	• 1 step operation • Return to origin
Monitor	• Display of axis and step data No. • Display of two items selected • from Position, Speed, Force.
Alarm	• Display of active alarm • Alarm reset
TB setting	• Reconnection of axis • Setting of easy/normal mode • Setting step data and selection of items from easy mode monitor

Menu Operations Flowchart

Menu
- Data
- Monitor
- Jog
- Test
- Alarm
- TB setting

Data
Step data No.
Setting of two items selected below
(Position, Speed, Force, Acceleration, Deceleration)

Monitor
Display of step No.
Display of two items selected below
(Position, Speed, Force)

Jog
Return to origin
Jog operation

Test
1 step operation

Alarm
Display of active alarm
Alarm reset

TB setting
Reconnect
Easy/Normal
Set item

Normal Mode

Function	Description
Step data	• Step data setting
Parameter	• Parameters setting
Test	• Jog operation/Constant rate movement • Return to origin • Test drive (Specify a maximum of 5 step data and operate.) • Compulsory output (Compulsory signal output, Compulsory terminal output)
Monitor	• Drive monitor • Output signal monitor • Input signal monitor • Output terminal monitor • Input terminal monitor
Alarm	• Active alarm display (Alarm reset) • Alarm log record display
File	• Data saving Save the step data and parameters of the controller which is being used for communication (it is possible to save four files, with one set of step data and parameters defined as one file). • Load to controller Loads the data which is saved in the teaching box to the controller which is being used for communication. • Delete the saved data.
TB setting	• Display setting (Easy/Normal mode) • Language setting (Japanese/English) • Backlight setting • LCD contrast setting • Beep sound setting • Max. connection axis • Distance unit (mm/inch)
Reconnect	• Reconnection of axis

Menu Operations Flowchart

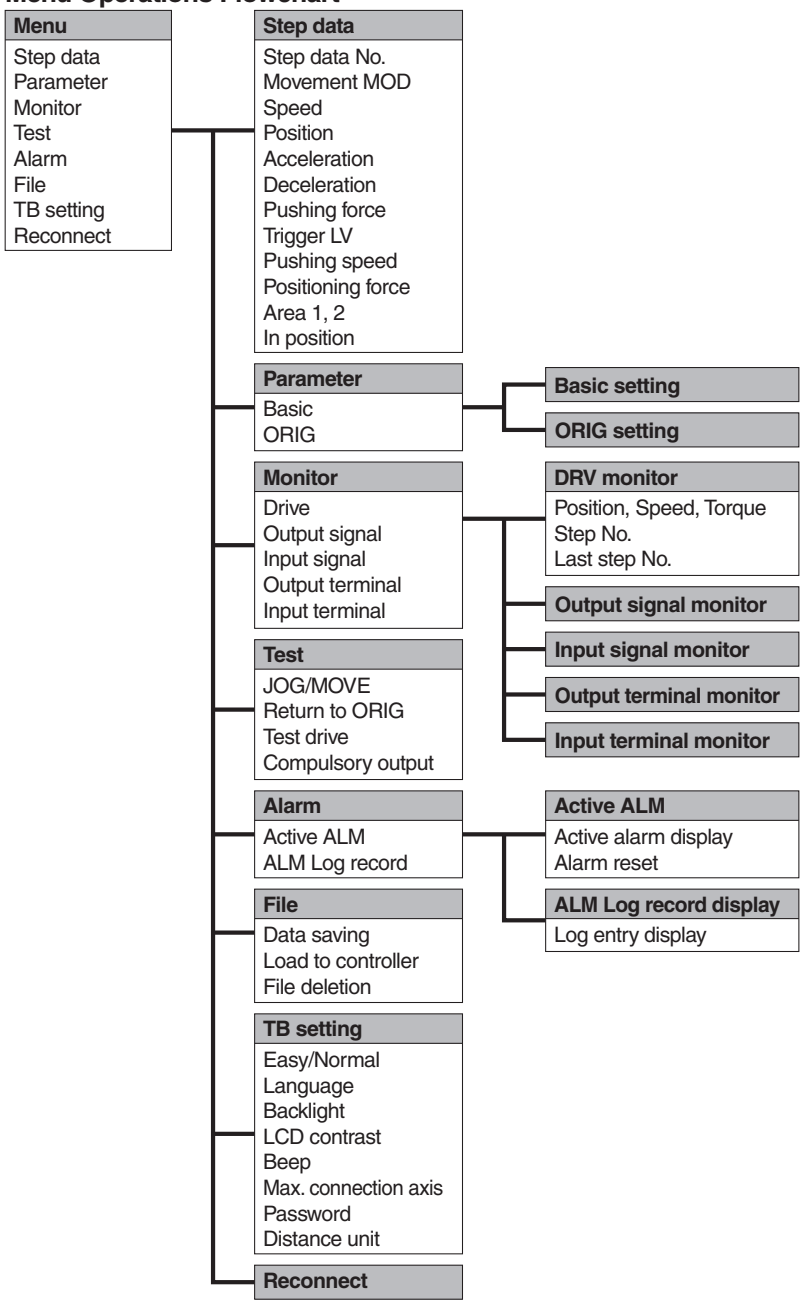

Dimensions

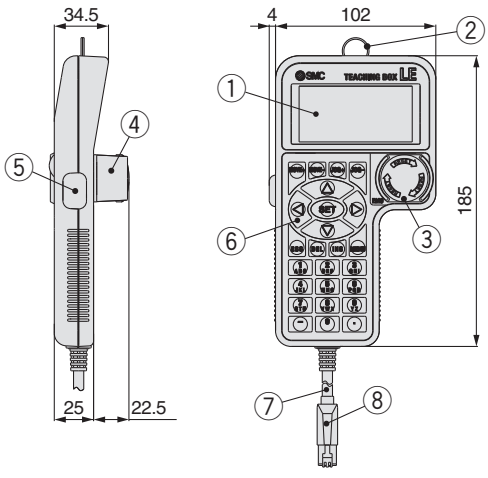

No.	Description	Function
1	**LCD**	A screen of liquid crystal display (with backlight)
2	**Ring**	A ring for hanging the teaching box
3	**Stop switch**	When switch is pushed in, the switch locks and stops. The lock is released when it is turned to the right.
4	**Stop switch guard**	A guard for the stop switch
5	**Enable switch (Option)**	Prevents unintentional operation (unexpected operation) of the jog test function. Other functions such as data change are not covered.
6	**Key switch**	Switch for each input
7	**Cable**	Length: 3 meters
8	**Connector**	A connector connected to CN4 of the controller

Programless Controller
Series LECP1

How to Order

LE C P 1 N 1 – LER10K-2

Controller

Compatible motor

P	Step motor (Servo/24 VDC)

Number of step data (Points)

1	14 (Programless)

Parallel I/O type

N	NPN
P	PNP

I/O cable length [m]

Nil	Without cable
1	1.5
3	3
5	5

Actuator part number

(Except cable specifications and actuator options)
Example: Enter [LER10K-2] for LER10K-2L-R16N1

∗ **When placing an order for the controller with an actuator, this part number is not necessary.**

The controller is sold as single unit after the compatible actuator is set.

Confirm that the combination of the controller and the actuator is correct.

∗ Refer to the operation manual for using the products. Please download it via our website. http://www.smcworld.com

Specifications

Basic Specifications

Item	LECP1
Compatible motor	Step motor (Servo/24 VDC)
Power supply Note 1)	Power supply voltage: 24 VDC ±10% Max. current consumption: 3A (Peak 5A) Note 2) [Including the motor drive power, control power supply, stop, lock release]
Parallel input	6 inputs (Photo-coupler isolation)
Parallel output	6 outputs (Photo-coupler isolation)
Stop points	14 points (Position number 1 to 14(E))
Compatible encoder	Incremental A/B phase (800 pulse/rotation)
Serial communication	RS485 (Modbus protocol compliant)
Memory	EEPROM
LED indicator	LED (Green/Red) one of each
7-segment LED display Note 3)	1 digit, 7-segment display (red) Figures are expressed in hexadecimal (“10” to “15” in decimal number are expressed as “A” to “F”)
Lock control	Forced-lock release terminal Note 4)
Cable length [m]	I/O cable: 5 or less Actuator cable: 20 or less
Cooling system	Natural air cooling
Operating temperature range	32 to 104°F (0 to 40°C) (No freezing)
Operating humidity range [%RH]	90 or less (No condensation)
Storage temperature range	14 to 140°F (–10 to 60°C) (No freezing)
Storage humidity range [%RH]	90 or less (No condensation)
Insulation resistance [MΩ]	Between the housing (radiation fin) and SG terminal 50 (500 VDC)
Weight	0.29 lbs (130g)

Note 1) Do not use the power supply of “inrush current prevention type” for the controller input power supply.
Note 2) The power consumption changes depending on the actuator model. Refer to the each actuator’s operation manual etc. for details.
Note 3) “10” to “15” in decimal number are displayed as follows in the 7-segment LED.

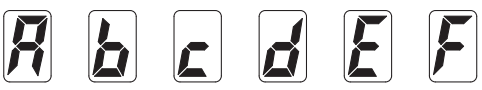

Decimal display	10	11	12	13	14	15
Hexadecimal display	A	b	c	d	E	F

Note 4) Applicable to non-magnetizing lock.

Details of The Controller

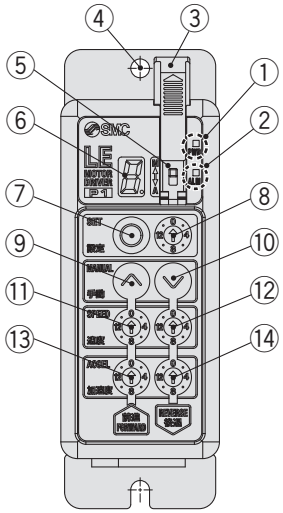

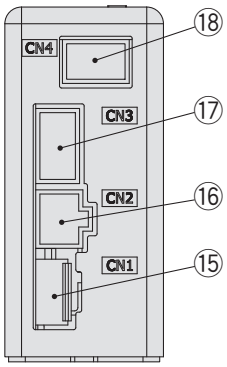

No.	Display	Description	Details
①	**PWR**	Power supply LED	Power supply ON/servo ON :Green turns on Power supply ON/servo OFF :Green flashes
②	**ALM**	Alarm LED	With alarm : Red turns on Parameter setting : Red flashes
③	—	Cover	Change and protection of the mode SW (Close the cover after changing SW)
④	—	FG	Frame ground (Tighten the bolt with the nut when mounting the controller. Connect the ground wire.)
⑤	—	Mode swith	Switch the mode between manual and auto.
⑥	—	7-segment LED	Stop position, the value set by ⑧ and alarm information are displayed.
⑦	**SET**	Set button	Decide the settings or drive operation in Manual mode.
⑧	—	Position selecting switch	Assign the position to drive (1 to 14), and the origin position (15).
⑨	**MANUAL**	Manual forward button	Perform forward jog and inching.
⑩		Manual reverse button	Perform reverse jog and inching.
⑪	**SPEED**	Forward speed switch	16 forward speeds are available.
⑫		Reverse speed switch	16 reverse speeds are available.
⑬	**ACCEL**	Forward acceleration switch	16 forward acceleration steps are available.
⑭		Reverse acceleration switch	16 reverse acceleration steps are available.
⑮	**CN1**	Power supply connector	Connect the power supply cable.
⑯	**CN2**	Motor connector	Connect the motor connector.
⑰	**CN3**	Encoder connector	Connect the encoder connector.
⑱	**CN4**	I/O connector	Connect I/O cable.

How to Mount

Controller mounting shown below.

1. Mounting screw (LECP1□□-□)

(Installation with two M4 screws)

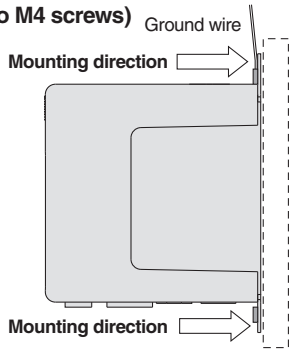

2. Grounding

Tighten the bolt with the nut when mounting the ground wire as shown below.

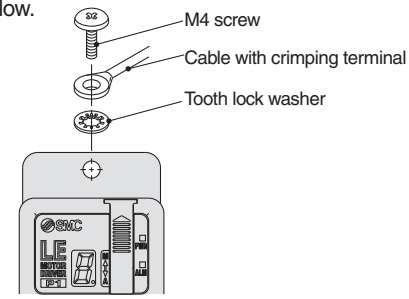

Controller

⚠Caution

- M4 screws, cable with crimping terminal and tooth lock washer are not included. Be sure to carry out grounding earth in order to ensure the noise tolerance.
- Use a watchmaker's screwdriver of the size shown below when changing position switch ⑧ and the set value of the speed/acceleration switch ⑪ to ⑭.

Size
End width **L**: 2.0 to 2.4 [mm]
End thickness **W**: 0.5 to 0.6 [mm]

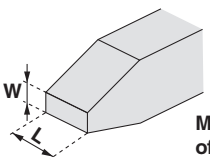

Magnified view of the end of the screwdriver

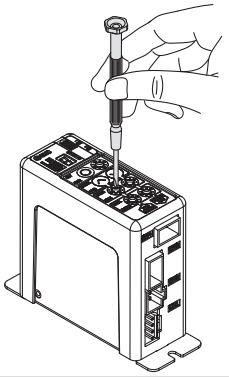

Dimensions

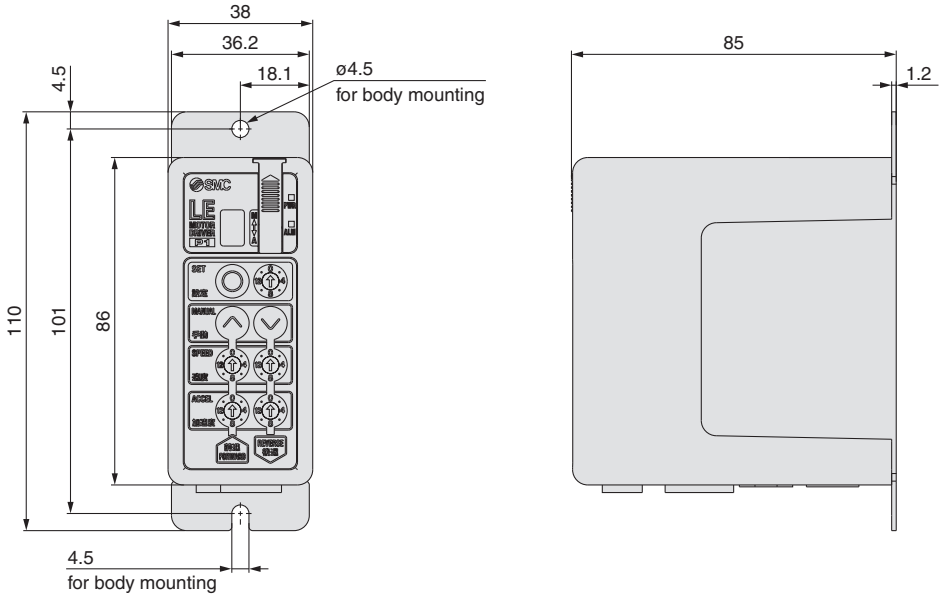
38
36.2
18.1
ø4.5
for body mounting
4.5
110
101
86
4.5
for body mounting
85
1.2

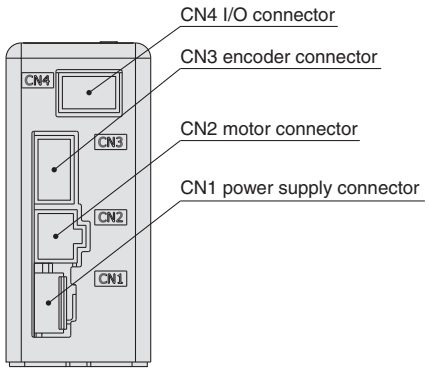
CN4 I/O connector
CN3 encoder connector
CN2 motor connector
CN1 power supply connector
CN4
CN3
CN2
CN1

Wiring Example 1

Power Supply Connector: CN1

* When you connect a CN1 power supply connector, please use the power supply cable (LEC-CK1-1).
* Power supply cable (LEC-CK1-1) is an accessory.

CN1 Power Supply Connector Terminal for LECP1

Terminal name	Cable color	Function	Function details
0V	Blue	Common supply (–)	M24V terminal/C24V terminal/BK RLS terminal are common (–).
M24V	White	Motor power supply (+)	This is the motor power supply (+) that is supplied to the controller.
C24V	Brown	Control power supply (+)	This is the control power supply (+) that is supplied to the controller.
BK RLS	Black	Lock release (+)	This is the input (+) that releases the lock.

Power supply cable For LECP1 (LEC-CK1-1)

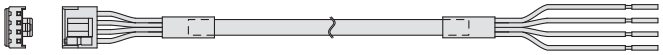

Wiring Example 2

Parallel I/O Connector: CN4

* When you connect a PLC, etc., to the CN4 parallel I/O connector, please use the I/O cable (LEC-CK4-□).
* The wiring should be changed depending on the type of the parallel I/O (NPN or PNP). Please wire referring to the following diagram.

■NPN

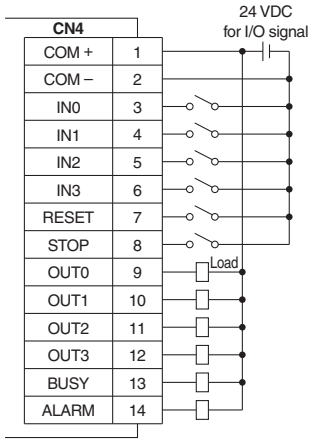

■PNP

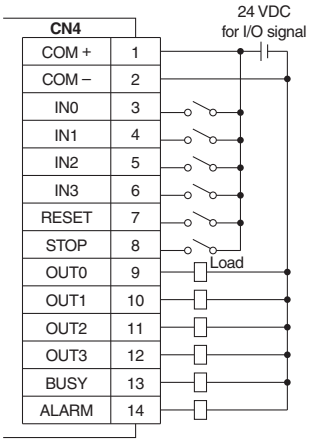

Input Signal

Name	Contents
COM+	Connects the power supply 24 V for input/output signal
COM–	Connects the power supply 0 V for input/output signal
IN0 to IN3	• Instruction to drive (input as a combination of IN0 to IN3) • Instruction to return to the origin position (IN0 to IN3 all ON simultaneously) Example - (instruction to drive for position no. 5) IN3: OFF, IN2: ON, IN1: OFF, IN0: ON
RESET	Alarm reset and operation interruption During operation : deceleration stop from position at which signal is input (servo ON maintained) While alarm is active : alarm reset
STOP	Instruction to stop (after maximum deceleration stop, servo OFF)

Output Signal

Name	Contents
OUT0 to OUT3	Turns on when the positioning or pushing is completed. (Output is instructed in the combination of OUT0 to 3.) Example - (operation complete for position no. 3) OUT3: OFF, OUT2: OFF, OUT1: ON, OUT0: ON
BUSY	Outputs when the actuator is moving
*ALARM Note)	Not output when alarm is active or servo OFF

Note) These signals are output when the power supply of the controller is ON. (N.C.)

Input Signal [IN0 - IN3] Position Number Chart ○: OFF ●: ON

Position number	IN3	IN2	IN1	IN0
1	○	○	○	●
2	○	○	●	○
3	○	○	●	●
4	○	●	○	○
5	○	●	○	●
6	○	●	●	○
7	○	●	●	●
8	●	○	○	○
9	●	○	○	●
10 (A)	●	○	●	○
11 (B)	●	○	●	●
12 (C)	●	●	○	○
13 (D)	●	●	○	●
14 (E)	●	●	●	○
Retun to origin	●	●	●	●

Output Signal [OUT0 - OUT3] Position Number Chart ○: OFF ●: ON

Position number	OUT3	OUT2	OUT1	OUT0
1	○	○	○	●
2	○	○	●	○
3	○	○	●	●
4	○	●	○	○
5	○	●	○	●
6	○	●	●	○
7	○	●	●	●
8	●	○	○	○
9	●	○	○	●
10 (A)	●	○	●	○
11 (B)	●	○	●	●
12 (C)	●	●	○	○
13 (D)	●	●	○	●
14 (E)	●	●	●	○
Retun to origin	●	●	●	●

Signal Timing

(1) Return to Origin

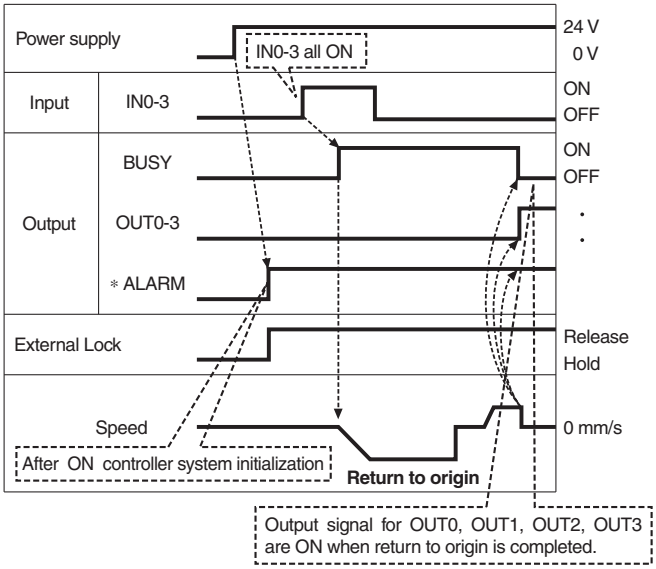

∗ "∗ALARM" is expressed as negative-logic circuit.

(2) Positioning Operation

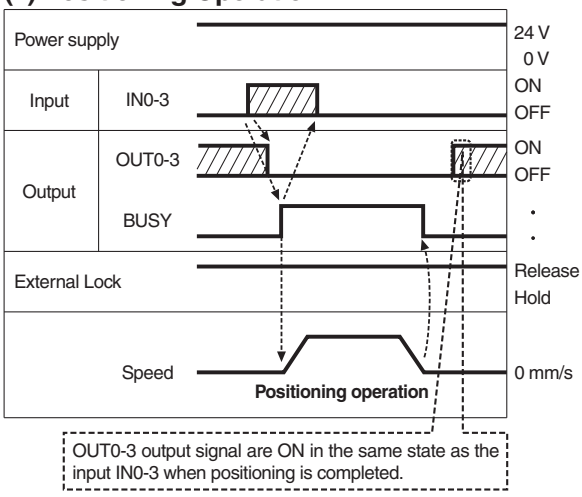

(3) Cut-off Stop (Reset Stop)

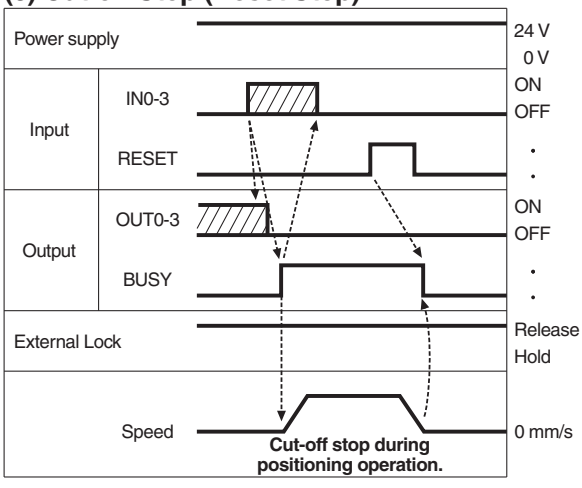

(4) Stop by The STOP Signal

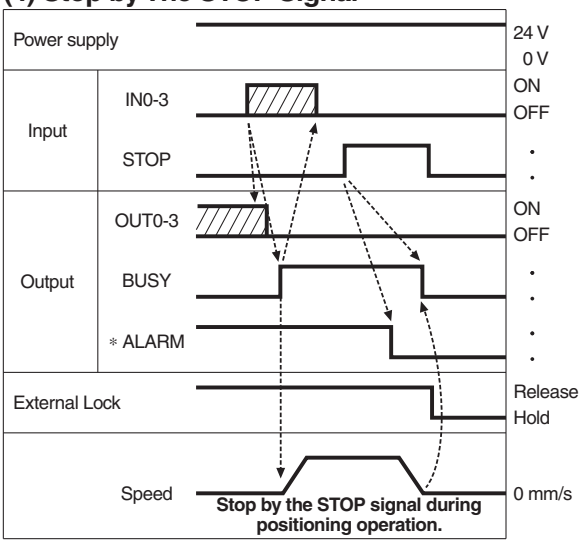

(5) Alarm Reset

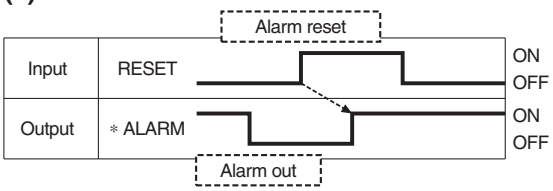

∗ "∗ALARM" is expressed as negative-logic circuit.

Options: Actuator Cable

[Robotic cable for step motor (Servo/24 VDC), standard cable]

LE – CP – 1 – ☐

Cable length (L)[m]

1	1.5
3	3
5	5
8	8*
A	10*
B	15*
C	20*

* Produced upon receipt of order (Robotic cable only)

Cable type

Nil	Robotic cable (Flexible cable)
S	Standard cable

LE-CP-1/3/5/Cable length: 1.5 m, 3 m, 5 m

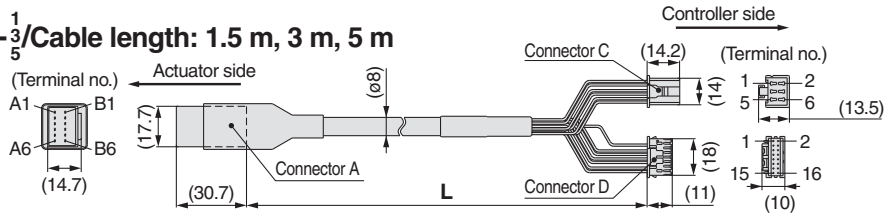

LE-CP-8/A/B/C/Cable length: 8 m, 10 m, 15 m, 20 m
(* Produced upon receipt of order)

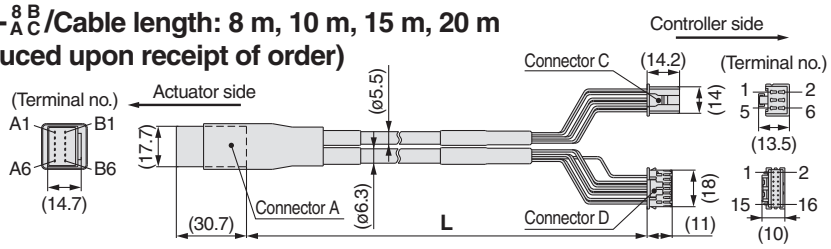

Circuit	Connector A terminal no.	Cable color	Connector C terminal no.
A	B-1	Brown	2
$\overline{A}$	A-1	Red	1
B	B-2	Orange	6
$\overline{B}$	A-2	Yellow	5
COM-A/COM	B-3	Green	3
COM-B/–	A-3	Blue	4

Shield

Circuit	Connector A terminal no.	Cable color	Connector D terminal no.
Vcc	B-4	Brown	12
GND	A-4	Black	13
$\overline{A}$	B-5	Red	7
A	A-5	Black	6
$\overline{B}$	B-6	Orange	9
B	A-6	Black	8
		—	3

Options

[Power supply cable]

LEC – CK1 – 1

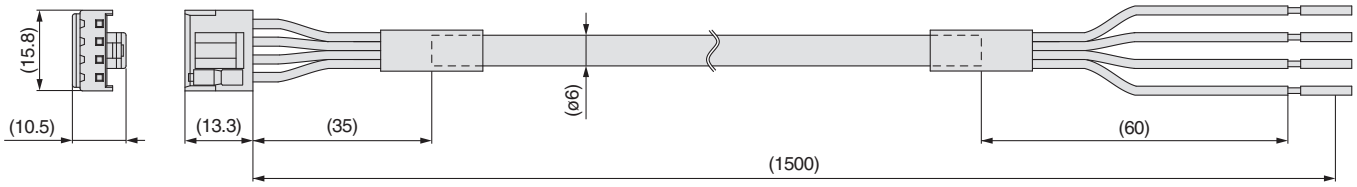

Terminal name	Covered color	Function
0V	Blue	Common supply (–)
M24V	White	Motor power supply (+)
C24V	Brown	Control power supply (+)
BK RLS	Black	Lock release (+)

∗ Conductor size: AWG20

[I/O cable]

LEC – CK4 – □

Cable length (L)[m]

1	1.5
3	3
5	5

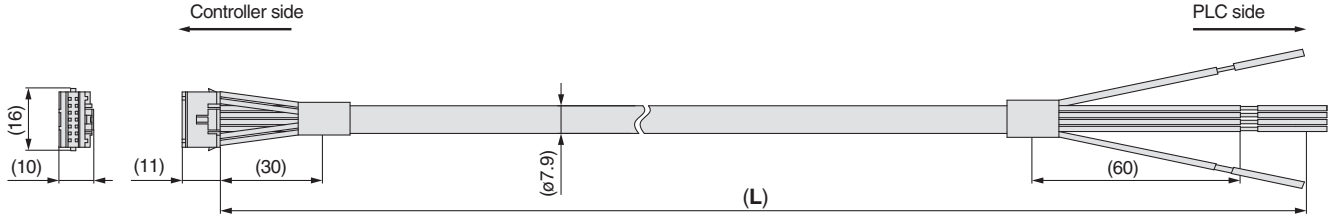

Terminal no.	Insulation color	Dot mark	Dot color	Function
1	Light brown	■	Black	COM +
2	Light brown	■	Red	COM –
3	Yellow	■	Black	OUT0
4	Yellow	■	Red	OUT1
5	Light green	■	Black	OUT2
6	Light green	■	Red	OUT3
7	Gray	■	Black	BUSY
8	Gray	■	Red	ALARM
9	White	■	Black	IN0
10	White	■	Red	IN1
11	Light brown	■ ■	Black	IN2
12	Light brown	■ ■	Red	IN3
13	Yellow	■ ■	Black	RESET
14	Yellow	■ ■	Red	STOP

∗ Conductor size: AWG26

∗ Parallel I/O signal is valid in auto mode. While the test function operates at manual mode, only the output is valid.